Vendo Engineering *Uni-2 Set Up Guide*

Size: 335 ml Can **Rev. A** **Date 1/6/03**
Pkg. Description/Type: President Ice Tea/Milk Tea Can
Franchise: Freser International

Column Setup

Cam Setting	Back Spacer	Neck Guide Locations	Gage Bar Clip Location	Gage Bar Location	Side Spacer	Sold Out Flap	Sold Out Spacer
3	7	N/A	B/#1 & B/#2	#2	1060686	1083449	1077457

Note: To properly vend 335ml cans, the Univendor-2 must have the columns setup correctly.

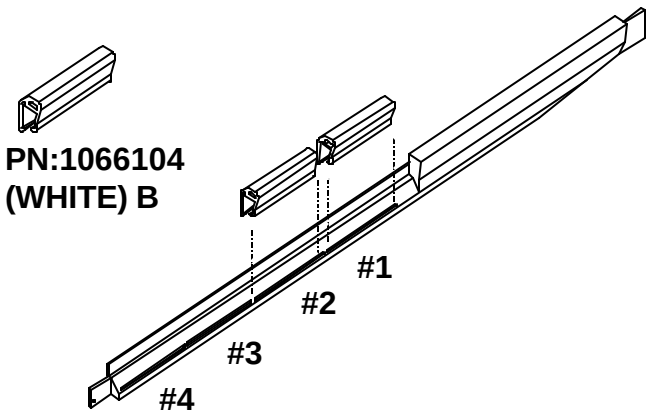

Gage Bar Clip Location

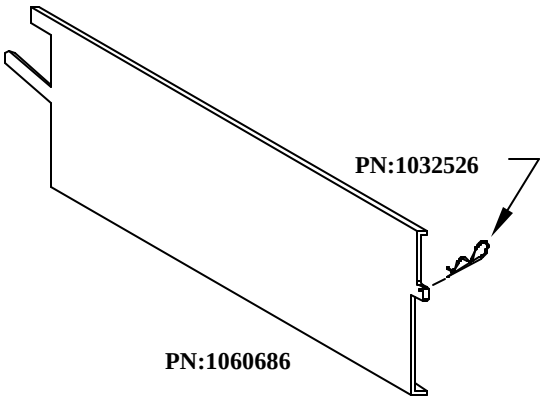

Shim/Spacer

Set Up Guide

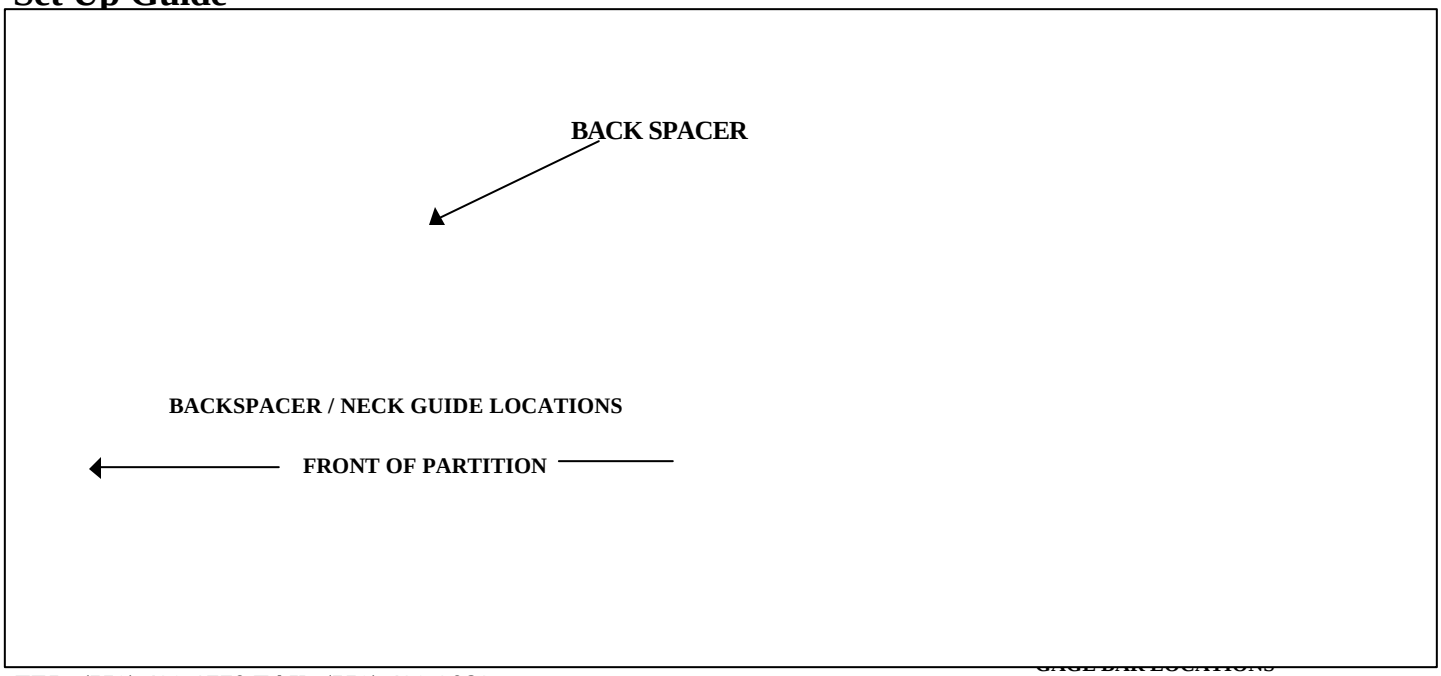

TEL: (559) 439-1770 FAX: (559) 439-2083.