UNIVENDOR-2 PRODUCT SET-UP GUIDE

REV. 11/24/09

1. **PRODUCT**

   12 OZ. CANS - 2.60 x 4.84 Long

2. **PRODUCT CAPACITY**

   48 PER COLUMN - 72", 57 PER COLUMN - 79"

3. **SET UP GUIDE UNIVENDOR-2**

Product	CAM POSITION	BACK SPACER	GAGE BAR	Sold out Lever	SIDE SPACER	GAGE BAR CLIP	
						Part No.	Position
12 oz CANS	3	8	2	1083449 SHORT	1060686	1066104 White	1 & 2

Note: To properly vend 12 oz. Cans. The Univendor-2 must have the columns setup correctly.

4. **GAGE BAR CLIP SET UP.**

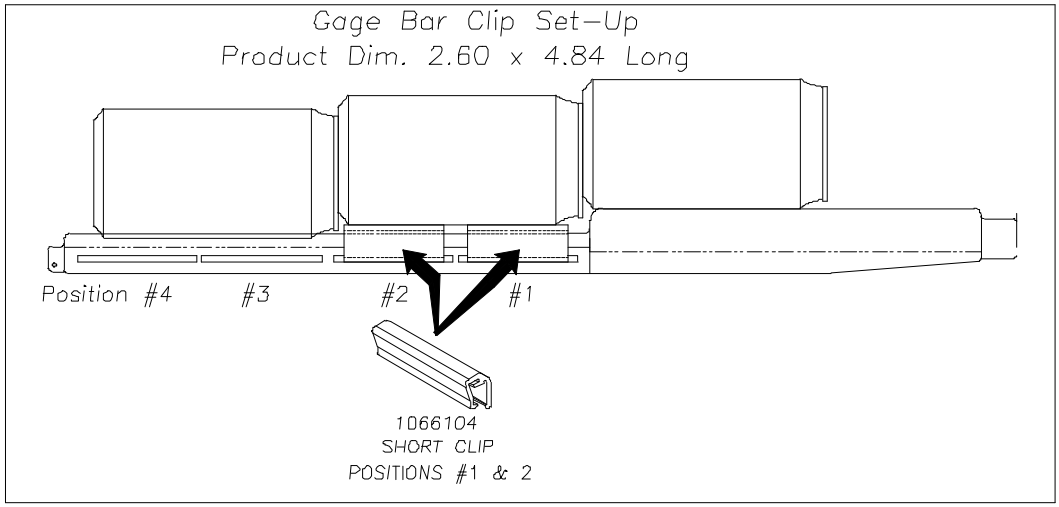

5. **SET UP GUIDE.**

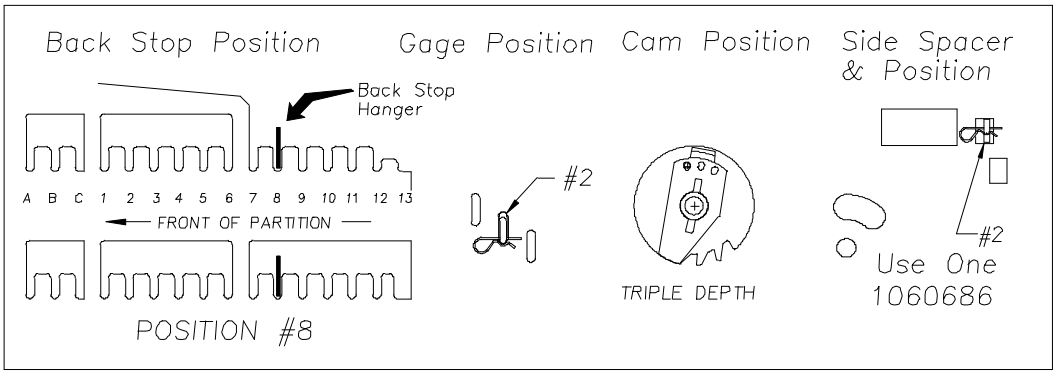

6. **SOLD-OUT LEVER TO BE SHORT STYLE WITH FRONT SPACER.**
   SPRING TO BE LOCATED ON THE RIGHT SIDE (LOW PRESSURE SETTING).