1. **PRODUCT**

   500 ML, 16.9 OZ. Klarbrunn Pure Drinking Water - 2.67 x 8.25 Long

2. **PRODUCT CAPACITY**

   34 PER COLUMN - 72", 42 PER COLUMN - 79"

3. **SET UP GUIDE UNIVENDOR-2**

Product	CAM POSITION	BACK SPACER	GAGE BAR	Sold out Lever	SIDE SPACER	GAGE BAR CLIP	
						Part No.	Position
500 ML Klarbrunn	2	11	2	389242 SHORT	1060686	NONE	0

Note: To properly vend Klarbrunn PET. The Univendor-2 must have the columns setup correctly.

4. **GAGE BAR CLIP SET UP.**

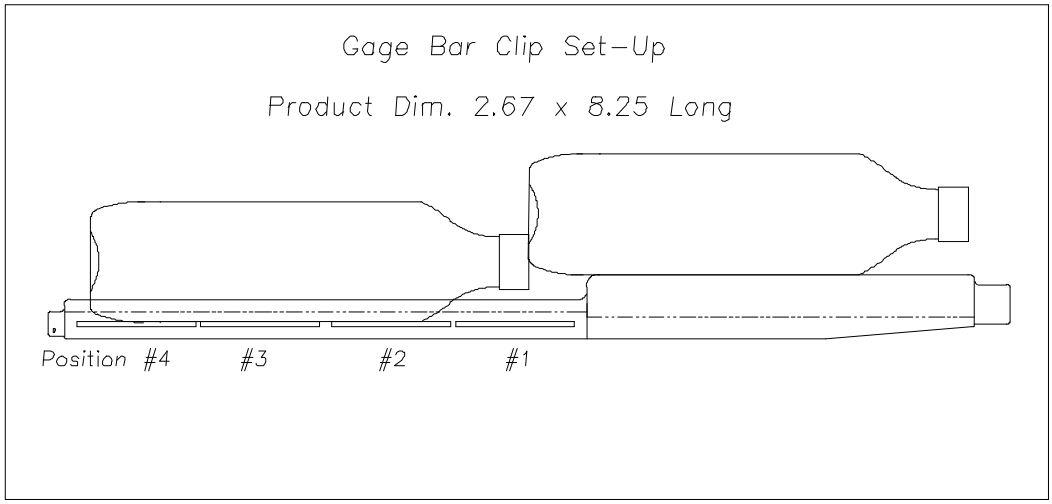

5. **SET UP GUIDE.**

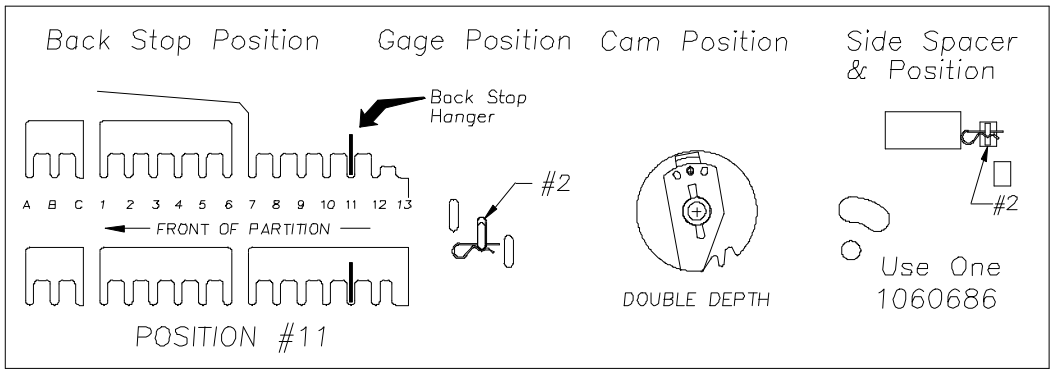

6 . **SOLD-OUT LEVER TO BE SHORT STYLE WITH FRONT SPACER.**
SPRING TO BE LOCATED ON THE RIGHT SIDE (LOW PRESSURE SETTING).