Vendo® Engineering *Uni-2 Set Up Guide*

Size: 16oz **Rev. A** **Date 3/21/03**
Pkg. Description/Type: Fruit $_2$O
Franchise: Very Fine

Column Setup

Cam Setting	Back Spacer	Neck Guide Locations	Gage Bar Clip Location	Gage Bar Location	Side Spacer	Sold Out Flap	Sold Out Spacer
2	9	N/A	C/#1	#2	1060686 Loc. #2	Long #1112163	N/A

Note: To properly vend product the Uni-2 must have the columns set up as illustrated. *Spring Loc. Rt (Low Tension) side.

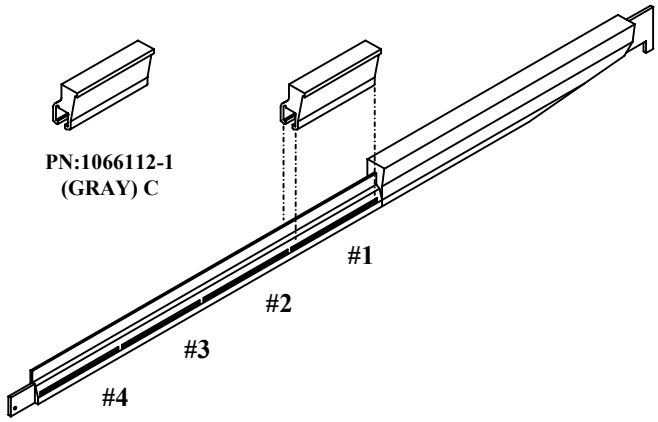

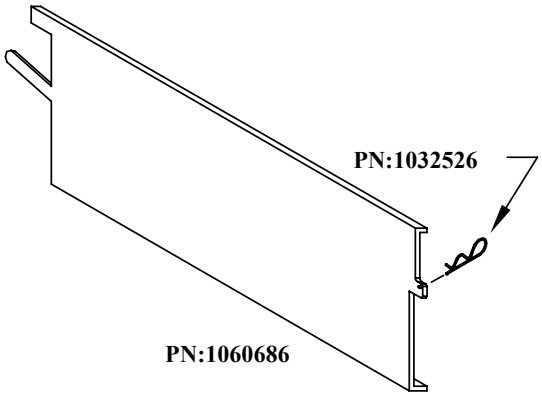

Gage Bar Clip Location

Shim/Spacer

Set Up Guide

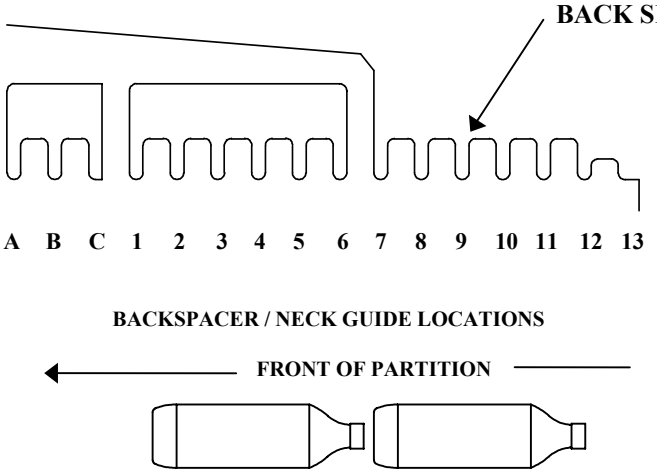

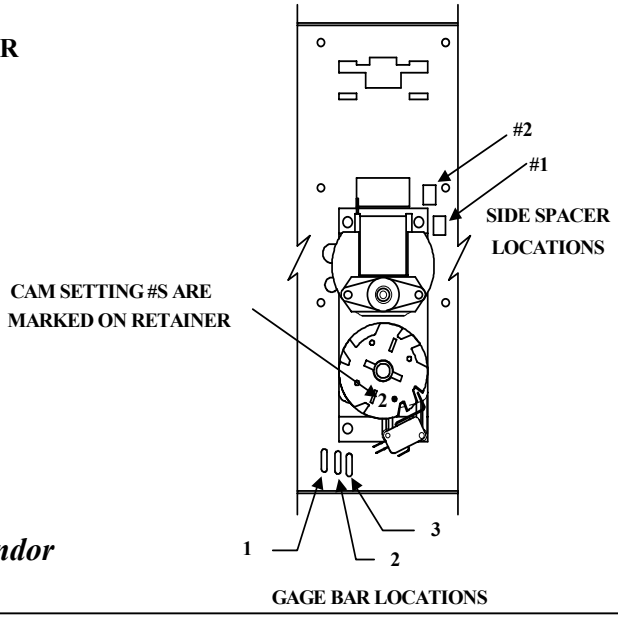

Note: Placement of bottle caps is to the back of the vendor

FOR OTHER PRODUCT SET-UP GUIDES, CONTACT THE VENDO COMPANY
TEL: (559) 439-1770 FAX: (559) 650-3455