Vendo® Engineering *Uni-2 Set Up Guide*

Size: 20oz **Rev. A Date 3/21/03**
Pkg. Description/Type: Fruit $_2$O
Franchise: Very Fine

Column Setup

Cam Setting	Back Spacer	Neck Guide Locations	Gage Bar Clip Location	Gage Bar Location	Side Spacer	Sold Out Flap	Sold Out Spacer
2	10	N/A	C/#1	#1	3 -1074465 Loc. #1	Short* 1083449	1077457

Note: To properly vend product the Uni-2 must have the columns set up as illustrated. *Spring Loc. Rt (Low Tension) side.

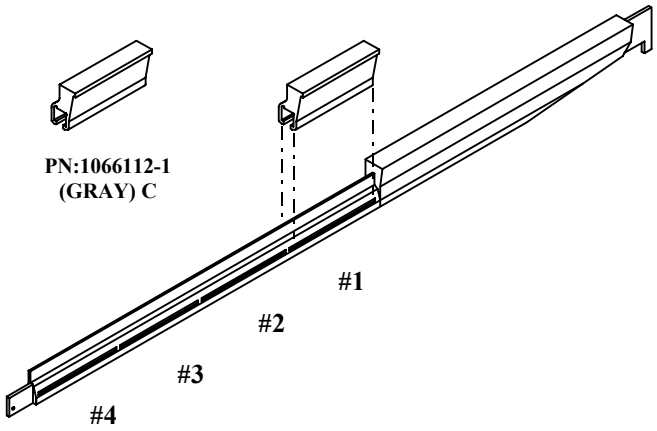

Shim/Spacer

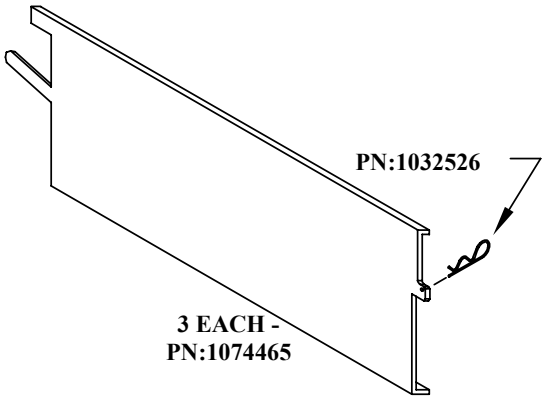

Gage Bar Clip Location

Set Up Guide

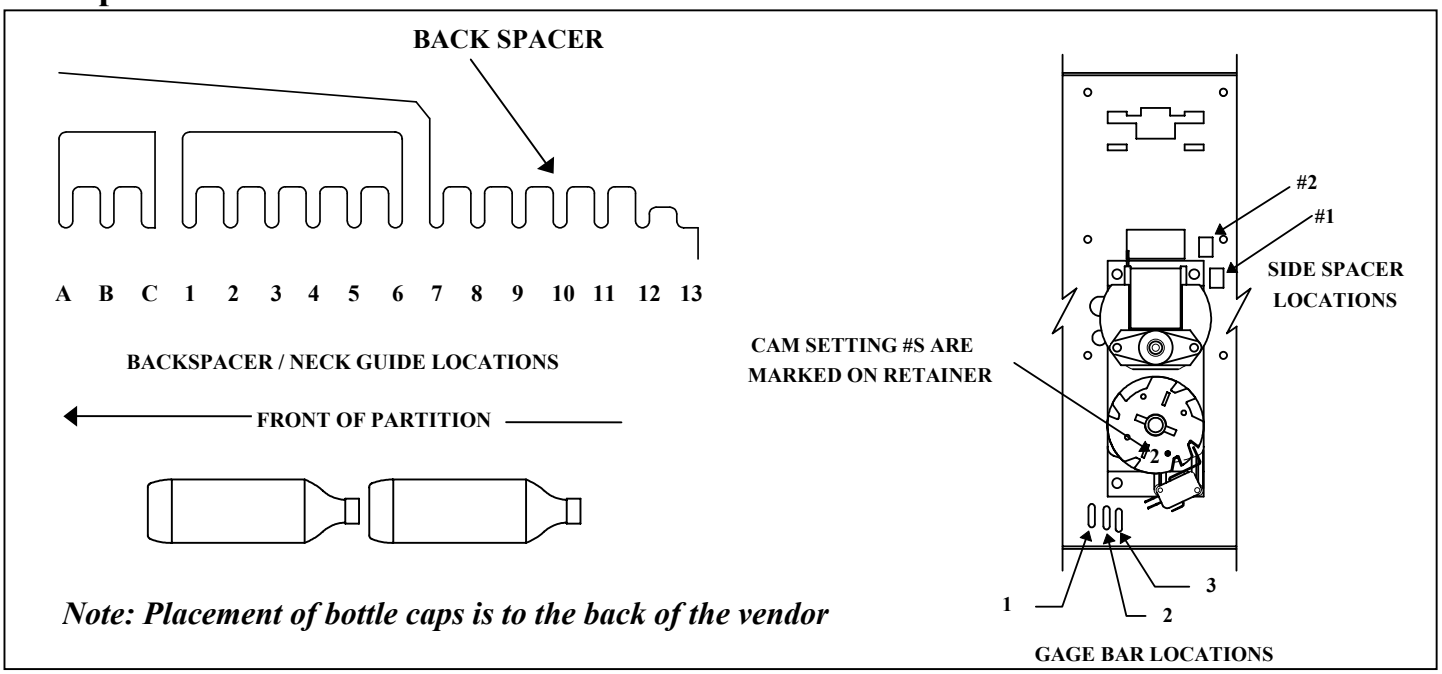

Note: Placement of bottle caps is to the back of the vendor

FOR OTHER PRODUCT SET-UP GUIDES, CONTACT THE VENDO COMPANY
TEL: (559) 439-1770 FAX: (559) 439-2083.