1. PRODUCT

500 ML, 1 PT.9 OZ. EVIAN MOUNTAIN TOP - WATER PET BOTTLE - 2.55 x 8.46 Long

2. PRODUCT CAPACITY

34 PER COLUMN - 72", 42 PER COLUMN - 79"

3. SET UP GUIDE UNIVENDOR-2

Product	CAM POSITION	BACK SPACER	GAGE BAR	Sold out Lever	SIDE SPACER	GAGE BAR CLIP	
						Part No.	Position
500 ML EVIAN	2	12	2 Front 3 Back	389242 SHORT	1069791	NONE	0

Note: To properly vend Evian 500ML.The Univendor-2 must have the columns setup correctly.

4. GAGE BAR CLIP SET UP.

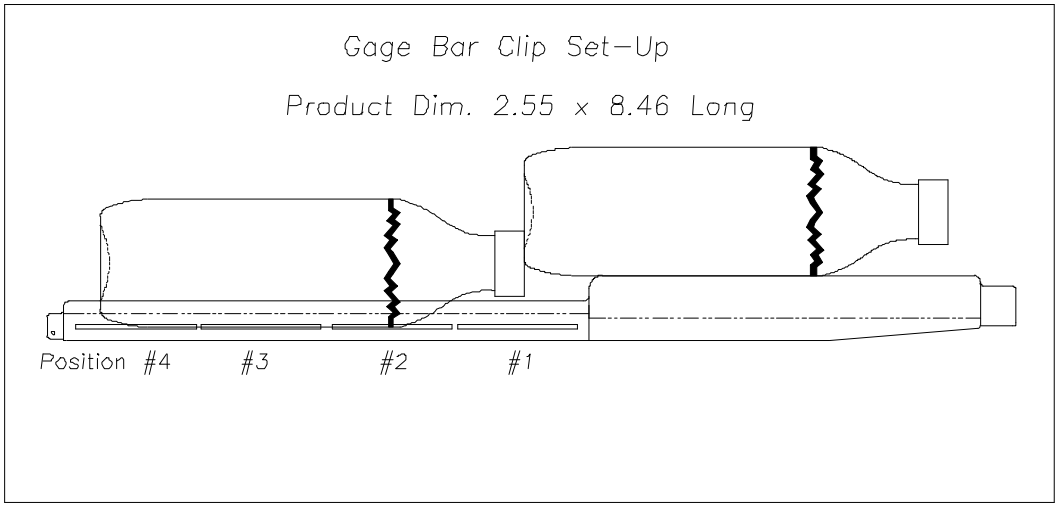

5. SET UP GUIDE.

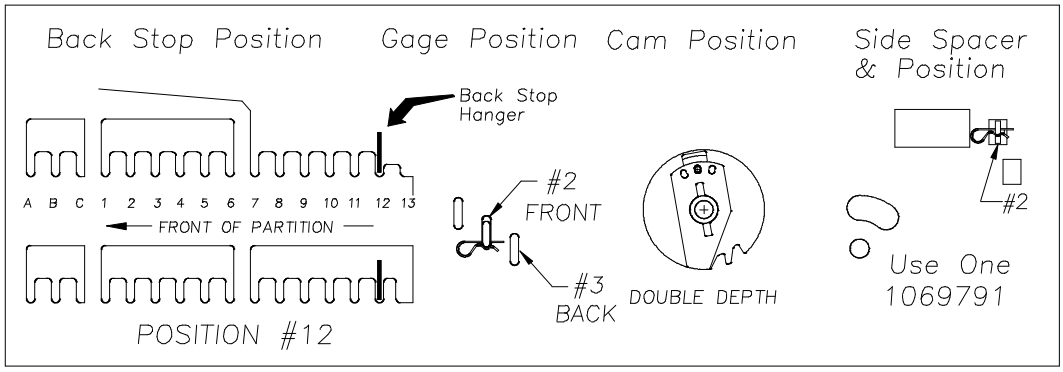

6 . SOLD-OUT LEVER TO BE SHORT STYLE WITH FRONT SPACER.
SPRING TO BE LOCATED ON THE RIGHT SIDE (LOW PRESSURE SETTING).

FOR OTHER PRODUCT SET-UP GUIDES, CONTACT THE VENDO COMPANY.
TEL: (559) 439-1770 FAX: (559) 439-2083.