Vendo Engineering

Uni2 Set Up Guide

Size: 16 oz.

Date 10/17/2003

Pkg. Description/Type: Sobe No Fear

Franchise: Pepsi Cola

Column Setup

Cam/Depth Setting	BackSpacer/ Neck Guide	Mag.Column Spacers	Gage Bar Clip	Gage Bar Location	Side Shim Spacer	Sold-Out Flap	Sold-Out Flap	Anti-Theft Rod Clip
2	4	N/A	C-1 1066112-1	2	1060686	Short 1083449	1077457	N/A

Note: To properly vend product the Uni-2 must have the columns set up as illustrated. *Spring Loc. Rt (Low Tension) side.

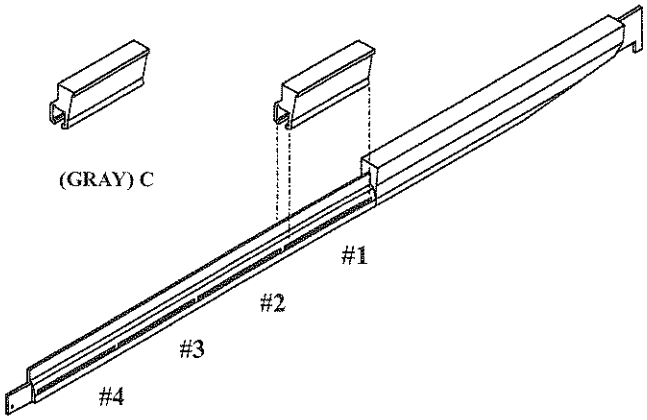

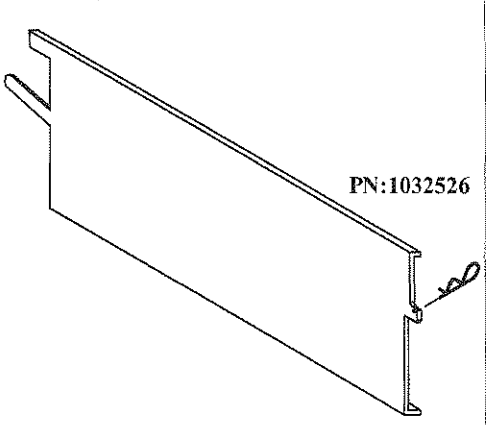

Gage Bar Clip Location

Shim/Spacer

Set Up Guide

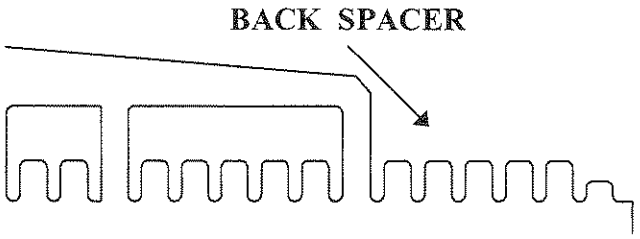

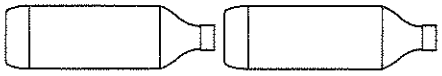

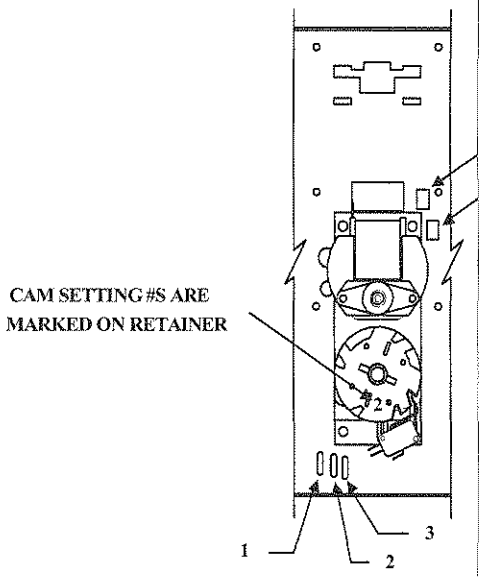

GAGE BAR LOCATIONS

FOR OTHER PRODUCT SET-UP GUIDES, CONTACT THE VENDO COMPANY.
TEL : (559) 439-1770 FAX: (559) 650-3455.
Toll Free (800) 344-7216