Support: http://www.jcmglobal.com/en/contact/default.aspx **Web-Site:** http://www.jcmglobal.com

Optipay® BV Series

DBV-30X Bill Validator

Operation and Maintenance Manual (Revision 4)

Includes configuration setup using a Palm Pilot® PDA Setting Module

P/N 960-000103R_Rev. 4 {EDP# 192689}

a RoHS Compliant Product

Issue #4019-SME-01-04

Issue #4019-SME-01-04

REVISION HISTORY			
Rev №.	**Date**	**Reason for Update**	**Comment**
A	1/06//05	**Initial Version**	
1	5/25/05	**Updated Initial Version**	
2	9/23/05	**Updated Revision 1 Version**	
3	2/28/08	**Updated Revision 2 Version with Additional HQ Information**	
4	9/23/10	**Further Additional HQ Update Information Added and Cash Box Size conflicts resolved.**	
5			
6			

Optipay® BV DBV-30X Series

Table of Contents

TOC

Table of Contents
Continued

Table of Contents
Continued

Table of Contents
Continued

Optipay® BV DBV-30X Series
List of Figures

LOF **Page**

List of Figures
Continued

List of Figures
Continued

List of Figures
Continued

List of Figures
Continued

THIS PAGE INTENTIONALLY LEFT BLANK

Optipay® BV DBV-30X
List of Tables

LOT **Page**

List of Tables
Continued

Optipay® BV
DBV-30X Bill Validator
Section 1

1 GENERAL INFORMATION

This section provides a general overview of the advantages and options of the Optipay® BV DBV-30X Dollar Bill Validator pictured in Figure 1-1 a & b. This first section is designed to help you navigate through this manual with ease and contains the following information:

- Model and Type Classifications
- Precautions
- Component Names
- General Specifications
- Retrieving Banknotes
- Cabling
- Dimensions
- Country Codes.

In order to make operation of this device and make navigation within this manual easier, the following illustrations were used within the text:

- **Safety instructions**, which need to be observed in order to protect the operators and equipment, have been written in bold text and have been given the pictographs: ⚠
- **Special *Notes***, which effect the use of the Bill Validator, have been written in *italic* text and have been given the pictograph: ☞
- **Steps,** requiring the operator to perform specific actions are given sequential numbers (1., 2., 3., etc.).

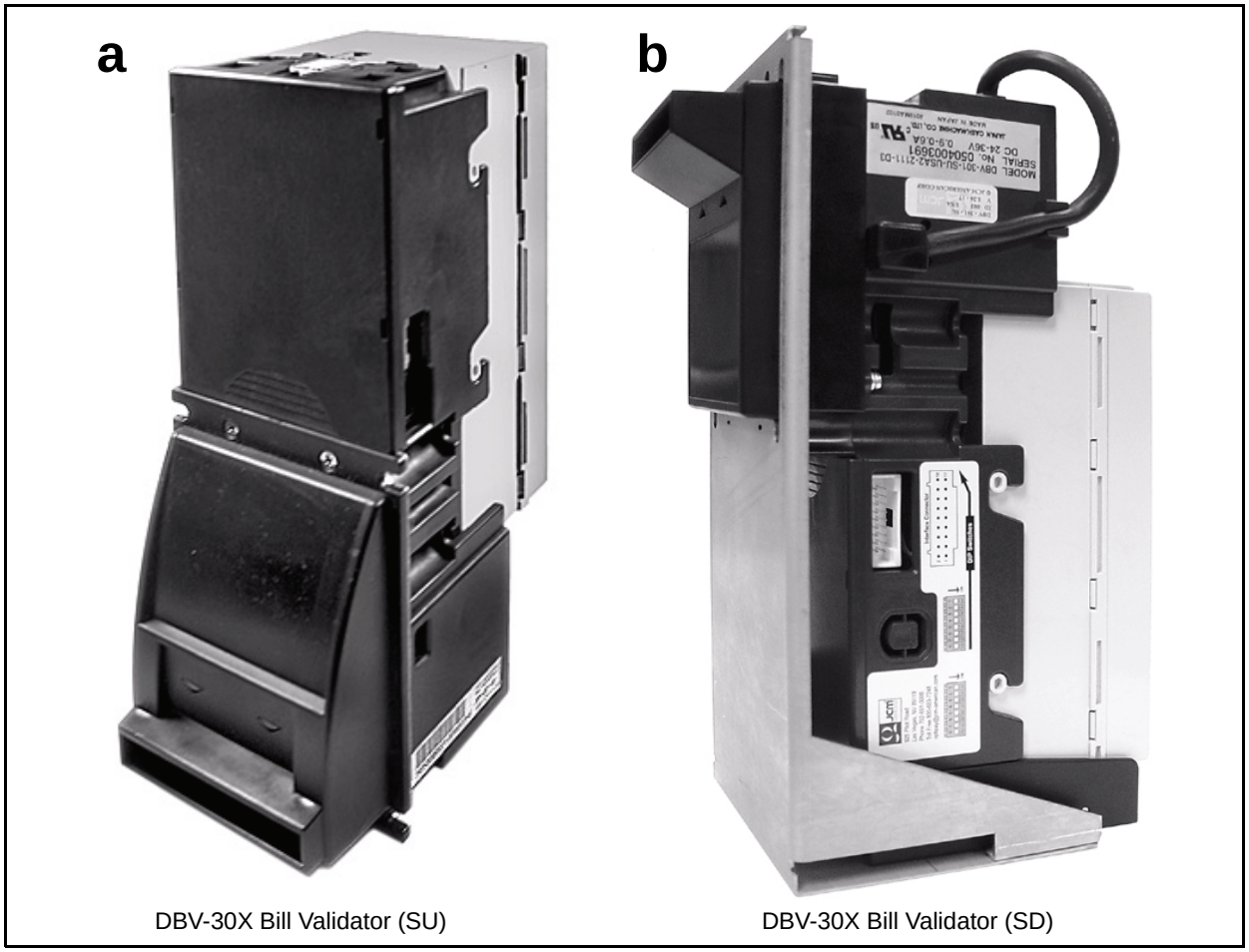

DBV-30X Bill Validator (SU) DBV-30X Bill Validator (SD)

Figure 1-1 Optipay BV DBV-30X-SU Bill Validator and DBV-30X-SD Bill Validator Units

Model and Type Classification

Tables 1-1 and 1-2 provide definitions for the Model and Type Number Codes found in the Labels located on the Unit.

Model Classifications

Table 1-1 Model Number Specifications

Nº	**Model : DBV - 3 0 1 - SU** **Nº (1) (2)(3)(4) (5)**
(1)	Model Name
(2)	Series Name
(3)	CPU Board Type 0 : JCM Standard
(4)	Power supply 0 : 12 V DC 1 : 18 - 38 V DC 2 : 115 V AC 3 : 24 v AC
(5)	Stacker Type SU : Upward vertical stacking Stacker Type SD : Downward vertical stacking

Type Classifications

Table 2: Type Number Specifications

Nº	**Type : * * * - * * * * * - D3** **Nº (1) (2)(3)(4)(5)(6) (7)**
(1)	Country Code
(2)	Cash Box Capacity A : 200 note capacity B : 300 note capacity C : 500 note capacity D : 1000 note capacity
(3)	Faceplate Type 1 : JCM Standard (SU/SD) 2 : JCM Standard Snack Mask (SU/SD)
(4)	Guide Width 1 : 67 mm width 2 : 68 mm width 3 : 71 mm width 4 : 73 mm width
(5)	Cash Box Type 1 : Upward Banknote ejection box 2 : Down stacker
(6)	Recycler Type (Optional) 0 : without Recycler Unit 1 : with Recycler Unit
(7)	Interface Type 03 : ID-003 Bi-Directional Serial, RS-232 C3 : ID-0C3 Bi-Directional Serial, Alternate D3 : ID-0D3 MDB Interface, Photo Coupler Isolated 02 : ID-002 One-Way Serial/Pulse 42 : ID-042 One-Way Serial/Pulse 44 : ID-044 One-Way Serial/Pulse

Precautions

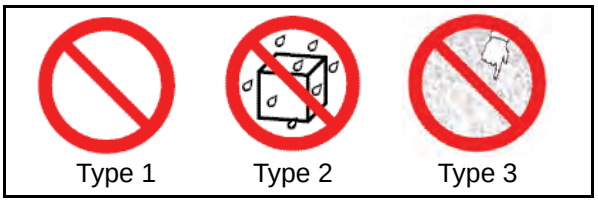

Figure 1-2 Precautionary Symbols

The Figure 1-2 symbols are defined as follows:

1. (**Type 1**) Do not insert a torn, folded, or wet Banknote, as this action may cause a Banknote jam inside the Unit.
2. (**Type 2**) Do not expose the unit to water. The unit contains several precision electronic devices which can be damaged if water or any liquid is sprayed or spilled into the Unit.
3. (**Type 3**) Do not install the unit into a dusty environment. Dust may affect the various Sensor's performance.

User cautions

1. Be sure to turn the power off before plugging or unplugging connectors.
2. Firmly close the Unit's transport path when applying power.
3. When closing the Units, ensure they click into place. Make sure to open and close a Unit gently, and take care that no dust or other foreign objects enter the Unit when opening the guides.
4. Do not allow inventory stock to endure high temperature, high humidity or a dusty environment.
5. Do not throw the Unit or allow it to fall to the ground.
6. If the Bill Validator is dirty due to dust, foreign objects, or other such debris adhering to it, Banknote acceptance rate will degrade. Be sure to clean the Validator at least once a month. Use a soft cloth to wipe dust from the Magnetic Head and the Optical Sensors. Never use organic solvents, such as paint thinner or Benzene to clean the device. Use a soft, lint-free cloth to wipe dust from the Rollers and Belts.
7. Inserting worn or damaged Banknotes may cause a jam. Shuffle new Banknotes well before inserting them, otherwise they may stick to one other and could cause a jam.

Primary Features

The DBV-30X contains the following features:

Intelligent 3-way LEDs for Easy Field Diagnosis

DBV-30X unit contains intelligent, tri-colored (3-way) diagnostic LEDs (See Figure 1-3).

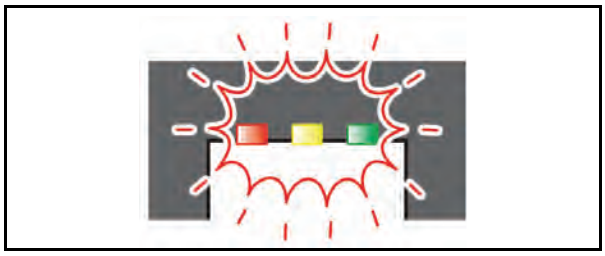

Figure 1-3 Tri-colored Diagnostic LEDs

Their blink count depends on the existing error condition. The color of an LED, and the number of blinks it exhibits indicates the error type.

Palm Pilot Programmable

A Palm Pilot® containing special programming software, can be connected to the DBV-30X unit to download a software program, execute diagnostic tests and retrieve the acceptance log data (See Figure 1-4).

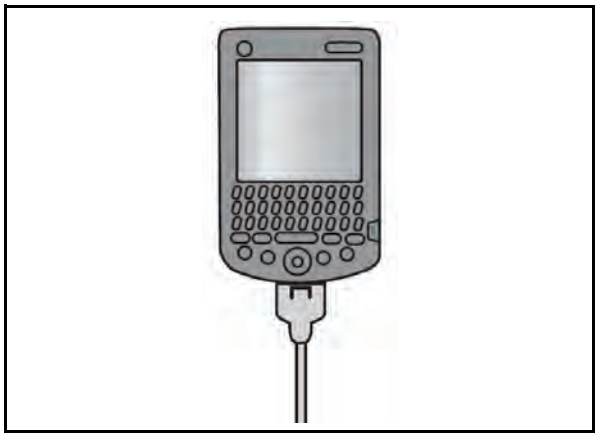

Figure 1-4 Palm Pilot Diagnostics Capabilities

For details concerning the connection of a Palm Pilot® for diagnostic use, refer to Section 6, Flash Memory Downloading in this Service Manual.

Built in Auditing Functions

The DBV-30X Unit contains the following built-in functions:

- Jam Rate
- Acceptance Rate
- Internal Diagnostics
- Money Auditing.

Optional Bill Recycler (RC-10)

The DBV-30X Unit can have an optional Banknote Recycling Unit (RC-10) attach to it as shown in Figure 1-5.

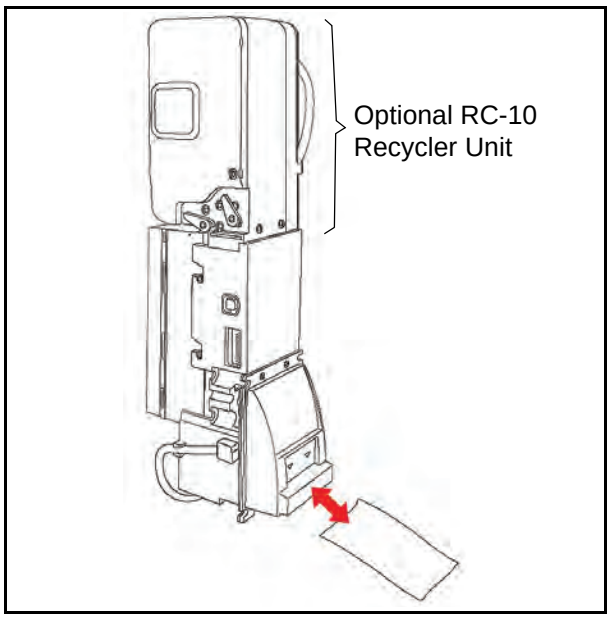

Figure 1-5 Optional Bill Recycler Availability

It is the first Bill Acceptor created for the Vendin-gIndustry containing built-in intelligence for recycling Banknotes.

Component Names

Figure 1-6 and Figure 1-7 illustrate the primary DBV-30X component part names and locations.

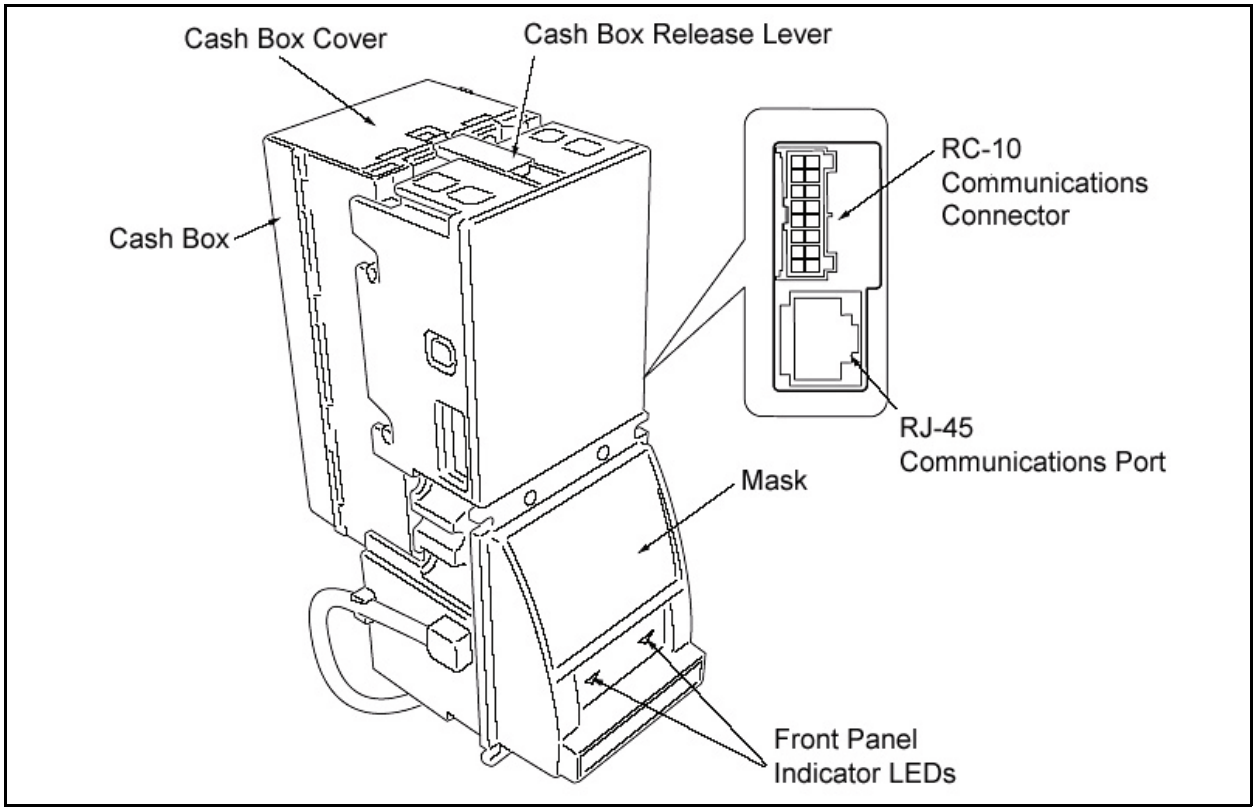

Figure 1-6 Bill Validator Top and Rear View

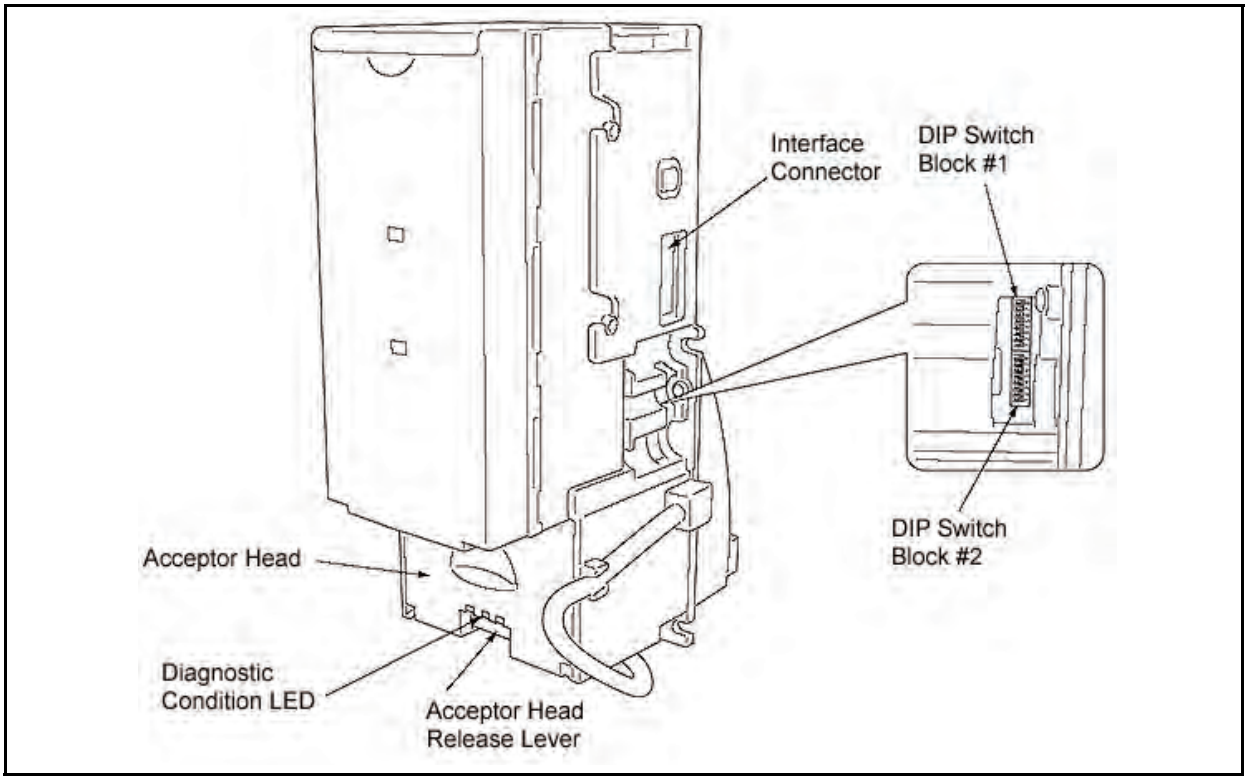

Figure 1-7 Bill Validator Bottom and Right Side View

System Configuration

Figure 1-8 illustrates a single DBV-300 System Configuration.

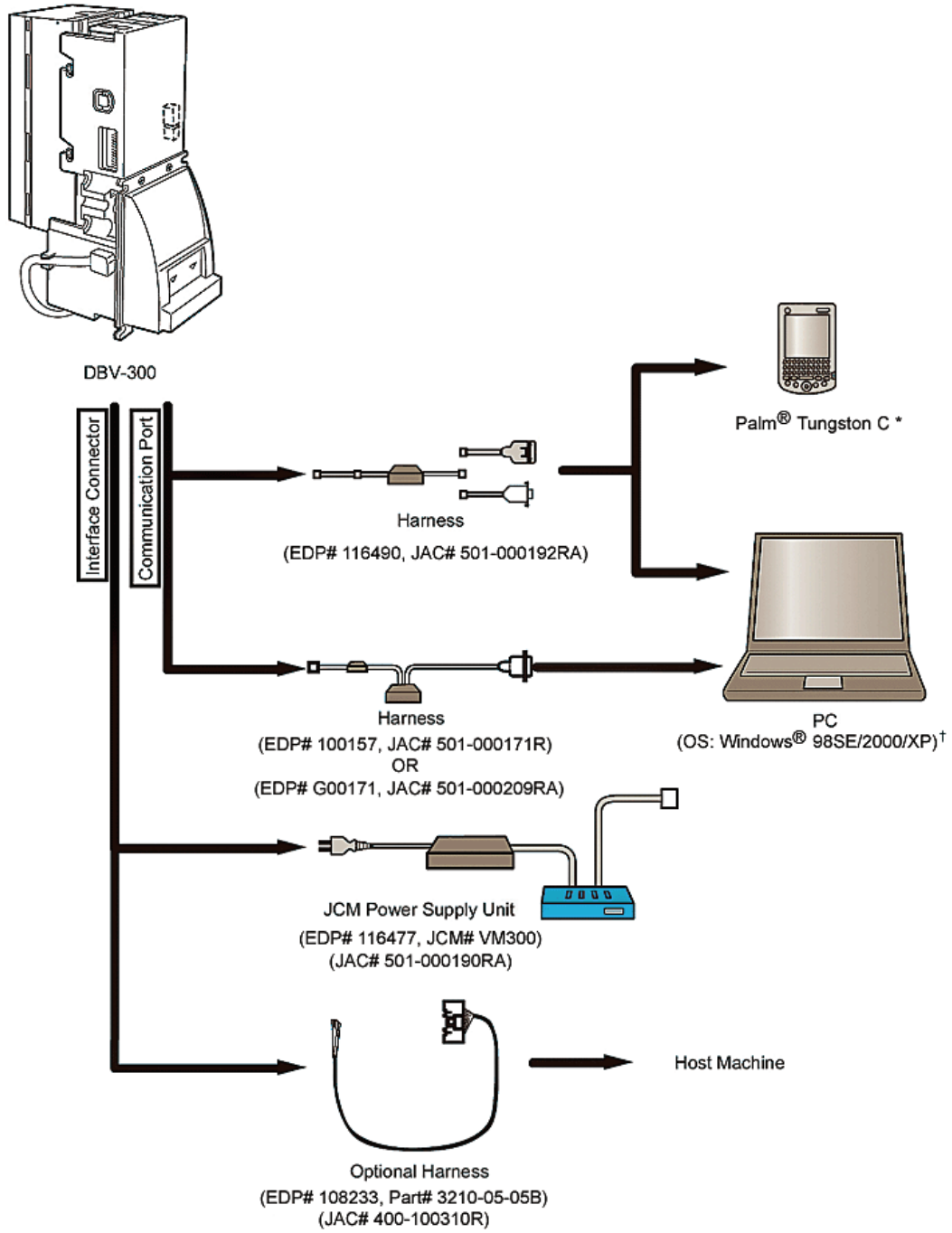

* A Palm Pilot® Handheld PDA can also be connected to download software, perform diagnostics and collect acceptance log data. Details for performing these procedures can be found in “Palm Pilot Flash Memory Downloading” on page 7-1 of Section 7.

† A Personal Computer (PC) can be connected to the system to download software and perform adjustments. For details regarding software downloading and adjustment procedures, refer to “PC Download & Adjustment” on page 6-1 of Section 6.

Figure 1-8 DBV-300 System Configuration

System Configuration (Continued)

Figure 1-9 illustrates the primary DBV-301/RC-10 System Configuration.

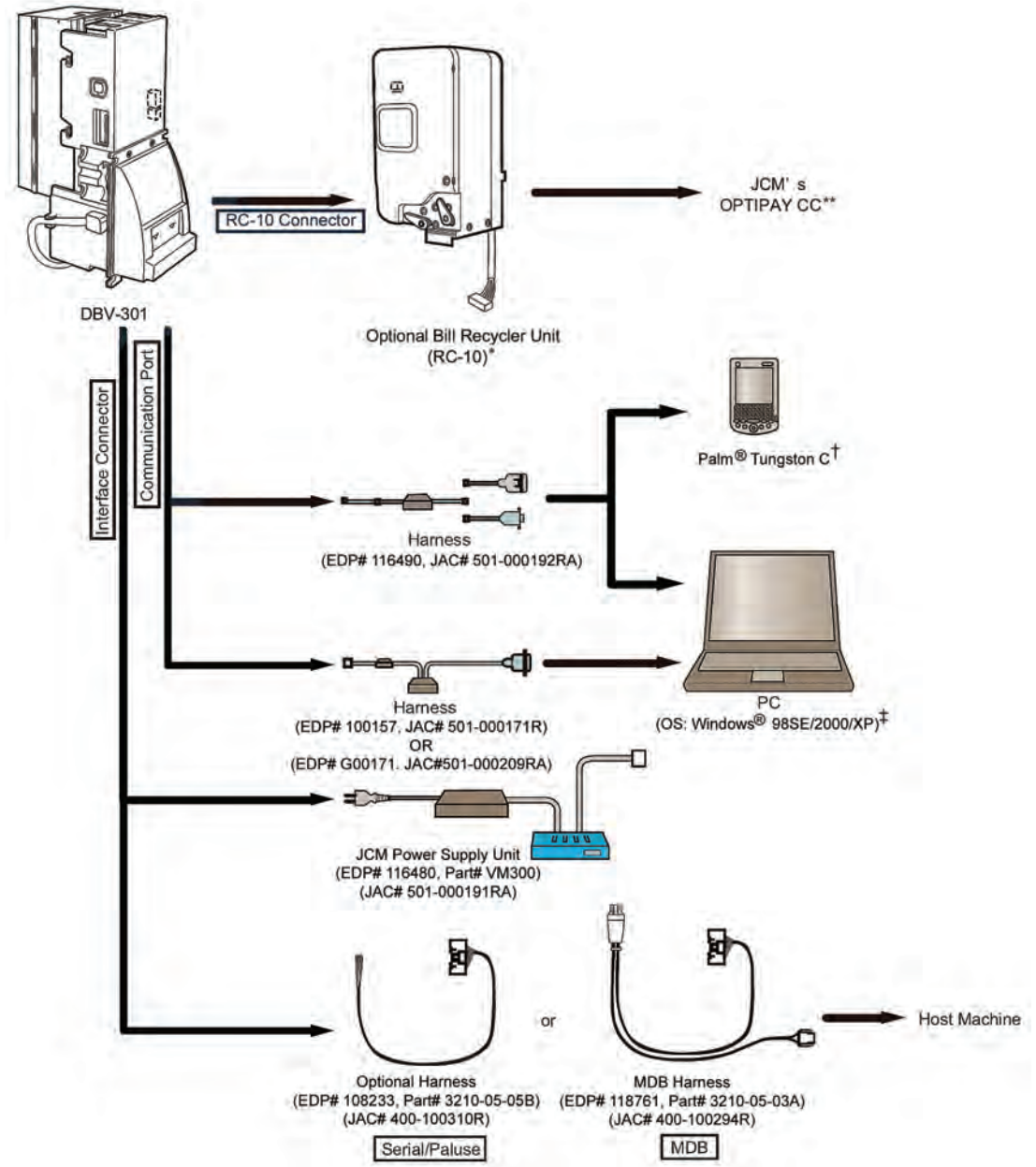

* & ** These units are intended for use in a variety of vending applications. The optional Optipay® Bill Recycler Unit (RC-10) attaches to the top of an Optipay® Bill Validator (DBV-301) unit. The two (2) Units are then connected to an Optipay A-66 Coin Changer, or interfaced to another MDB compatible Coin Changer via a JCM VERTO Module. For Vending applications, an ID-0D3 based Firmware Load needs to be downloaded into the DBV-30X memory. For details regarding the optional RC-10 attachment, refer to the separate Optipay® RC Service Manual (Part No. 960-000104R), or contact your local JCM representative.

† A Palm Pilot® Handheld PDA can also be connected to download Software, perform Diagnostics and collect Acceptance Log data. Details for performing these procedures can be found in “Palm Pilot Flash Memory Downloading” on page 7-1 of Section 7 of this Service Manual.

‡ A Personal Computer (PC) can be connected to the system to download Software and perform adjustments. For details regarding Software downloading and Adjustment Procedures, refer to “PC Download & Adjustment” on page 6-1 of Section 6 of this Service Manual.

Figure 1-9 DBV-301/RC-10 System Configuration

System Configuration (Continued)

Figure 1-10 illustrates a single DBV-302 System Configuration.

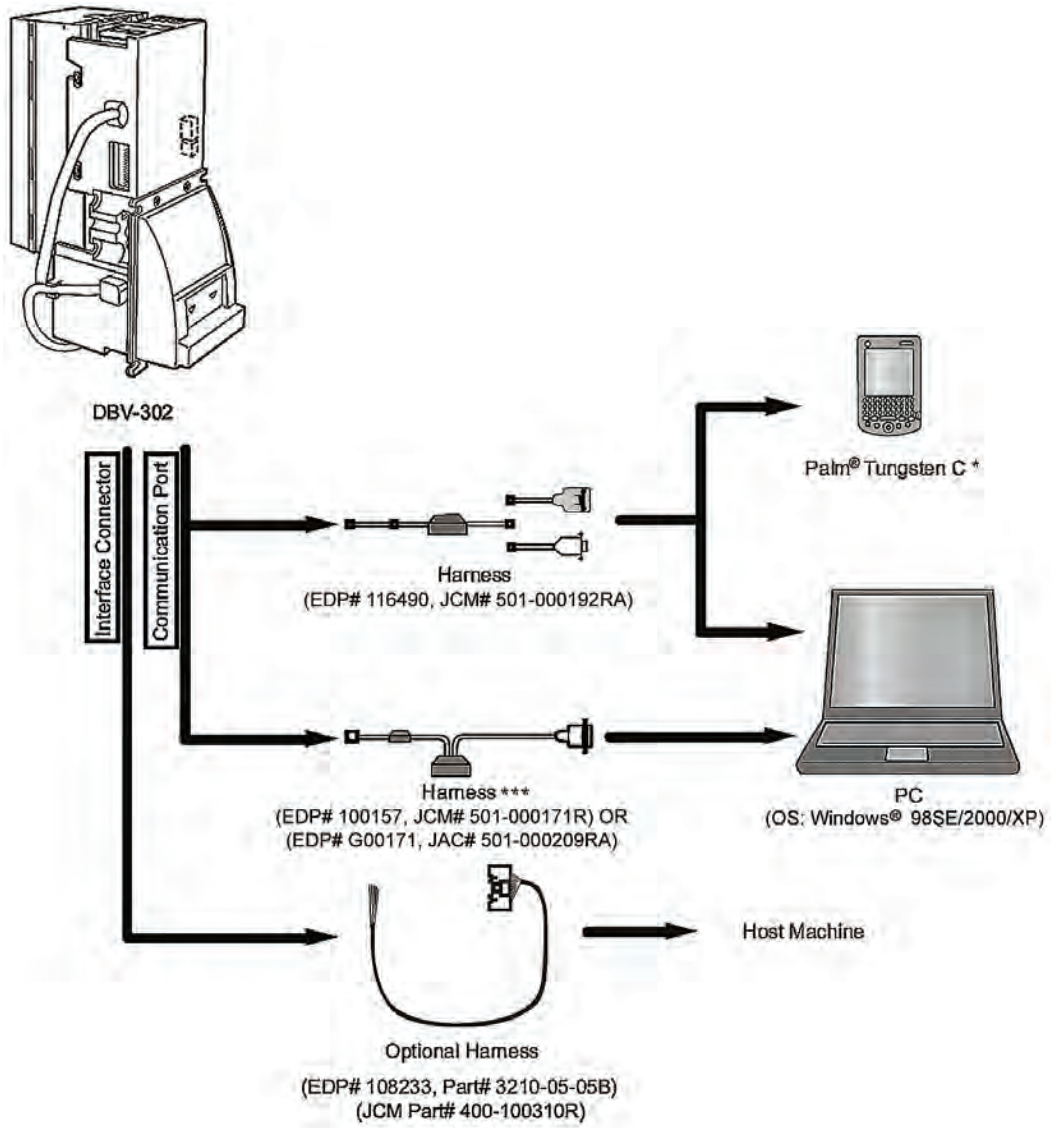

* A Palm Pilot® Handheld PDA can also be connected to download software, perform diagnostics and collect acceptance log data. Details for performing these procedures can be found in “Palm Pilot Flash Memory Downloading” on page 7-1 of Section 7.

** A Personal Computer (PC) can be connected to the system to download software and perform adjustments. For details regarding software downloading and adjustment procedures, refer to “PC Download & Adjustment” on page 6-1 of Section 6.

*** Customers with ID-003 (RS-232C) based units can download and use the following application programs from the JCM Website at http://www.jcmglobal.com/en/support/downloads/tools.aspx:

ID003 Driver Basic: Allows the user to communicate with, and perform basic Bill Acceptor functions on, a DBV-30X unit. A serial connection between a PC and the DBV-30X 18 pin Interface Connector is required.

Version Check Application JAC: Allows the user to check the version of Firmware currently installed in the DBV-30X unit. Uses Harness #100157 to connect between a PC Serial Port and the DBV-30X RJ-45 Connector Port.

WBA / DBV Download Application: Allows the user to check the current software version currently installed in the DBV-30X unit as well as allows the user to download and update the DBV-30X CPU Board Firmware. Requires a serial harness (JCM # 501-000171R, JAC # 501-000192RA or JAC# 501-000209RA) con-nection between a PC Serial Port and the DBV-30X RJ-45 Connector Port.

Figure 1-10 DBV-302 System Configuration

General Specifications

Table 1-1 lists the general specifications for any DBV-30X Bill Validator.

Table 1-1 DBV-30X Bill Validator Specifications

Nº	MODEL	SPECIFICATION
1	Acceptable Denominations:	Refer to the separate application Software Information Sheet
2	Insertion Directions:	Refer to the separate application Software Information Sheet
3	Acceptance Rate:	Refer to the separate application Software Information Sheet The acceptance rate will be calculated as follows: $\frac{\text{First acceptance number of sheets + Re-insertion acceptance number of sheets}^{*1}}{\text{Test Banknote total}} \times 100\ (\%)$ *1 = Acceptance following subsequent re-insertions Note: The following Banknote types are excluded: a) Banknotes with excessive or poor magnetism or unclear graphics b) Double (dual) notes c) Worn, dirty, wet, torn or excessively wrinkled Banknotes d) Banknotes having folded corners or edges e) Banknotes having the wrong cut dimensions or printing displacement
4	Processing speed:	Approximately 2 seconds (time from Banknote insertion to credit signal output) Approximately 3 seconds (time from Banknote insertion to Banknote stack completion)
5	Cash box:	a) Capacity: Approximately 200, 300, 500 or 1000 Banknotes b) Ejection directions: Rear ejection
6	Interface:	MDB Interface Types: ID-003 Bi-Directional Serial, RS-232 ID-0C3 Bi-Directional Serial, Alternate ID-0D3 MDB interface, Photo Coupler Isolation ID-002 One-Way Serial/Pulse ID-044 One-Way Serial/Pulse (Refer to “” on page 2-1 of Section 2 for proper Interface Connections)
7	Escrow:	1 Banknote
8	Indication:	a) Indication LED (green LED at front side) b) Condition LEDs (green, yellow and red LEDs at rear side)
9	Power supply:	For DBV-300 = 12 V DC (±5%), 2.5 A For DBV-301 = 24 V DC (±5%), 2.5 A For DBV-302 = 117 VAC 50/60 Hz Nominal
10	Power consumption:	a) Standby status: 0.2 A b) Operation status: 0.4 A (0.9 A maximum)
11	Environmental conditions:	a) Operational temperature: -15 °C to 60 °C b) Operational humidity: 15 to 95% RH (no condensing) c) Storage temperature: -20 °C to 60 °C d) Storage humidity: 15 to 95% RH (no condensing) e) Light disturbance: Direct sunlight should be avoided
12	Outline dimensions:	4.11 in. (104.5 mm) Width, 9.58 in. (243.5 mm) Height, 6.10 in. (155 mm) Depth (with faceplate)
13	Weight:	Approximately 2.64 lbs. (1.2 kg)
14	Mounting:	Vertical Mounting only (verify with your sales representative prior to selecting a final attachment method).

Technical Specifications

Table 1-2 lists the technical specifications for a DBV-30X Bill Validator.

Table 1-2 DBV-30X Technical Specifications

Nº	CONDITION	SPECIFICATION
1	Banknote Size Accepted	Width Minimum = 2.559 inches - Maximum = 2.835 inches (min. 65 mm - max. 72 mm)[a] Length minimum = 4.724 inches - maximum = 6.299 inches (min. 120 - max. 160 mm)
2	Insertion Direction	Refer to the separate application Software Information Sheet
3	Acceptance Rate	Refer to the separate application Software Information Sheet
4	Processing Speed	Approx. 2 seconds (from Banknote insertion to credit signal output) Approx. 3 seconds (from Banknote insertion to stacking completion)
5	Cash Box Capacity	200 notes Cash Box (Type A) 300 notes Cash Box (Type B) 500 notes Cash Box (Type C) 1000 notes Cash Box (Type D)
6	Interface	Refer to Table 1-1 Point 6 for the various interfaces available[b]
7	Escrow	1 Banknote
8	LED(s)	Condition LEDs (Red/Yellow/Green) (Rear panel) Indication LED (Green) (Front panel)

a Banknotes narrower than 65 mm (width) or wider than 71mm (width) will require special Banknote guides. Contact your JCM sales representative for procurement details.

b When using the ID-0D3 MDB Interface, the optional Bill Recycler Unit (RC-10) can be attached. For details about using the optional RC-10 Unit, refer to the separate Optipay RC Service Manual (Part No. 960-000104R).

Environmental Specifications

Table 1-3 lists the environmental specifications for a DBV-30X Bill Validator.

Table 1-3 DBV-30X Environmental Specifications

Nº	CONDITION	SPECIFICATION
1	Operation Temperature[a]	5°F to 140°F (-15°C to 60°C)
2	Storage Temperature	-4°F to 140°2006,-20°C to 60°C)
3	Operation Humidity*	+15% to 95% RH (non condensing)
4	Storage Humidity	+15% to 95% RH (non condensing)
5	Light Sensitivity	Avoid contact with direct Sunlight
6	Installation Area	Indoor and Outdoor (when not exposed to wind and/or weather)

a Be sure to satisfy the Temperature and Humidity conditions illustrated in the following Graph:

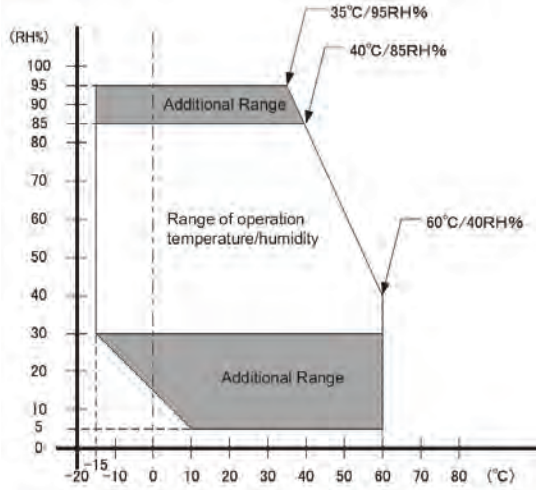

Electrical Specifications

Table 1-4 lists the electrical specifications for any DBV-30X Bill Validator.

Table 1-4 DBV-30X Electrical Specifications

Nº	CONDITION	DBV-300	DBV-301	DBV-302
1	Power Supply	DC+12V (+5%) 2.5A (Recommended)	DC+24V (+5%) 2.5A (Recommended)	AC 117V Nominal AC 90V to AC 123V (50/60Hz)
2	Power Consumption	Standby: 0.3A Operation: 0.6A (Max: 1.5A)	Standby: 0.2A Operation: 0.4A (Max: 0.9A)	Standby: 0.07A Operation: 0.16A (Max: 0.45A)

Structural Specifications

Table 1-5 lists the structural specifications for a DBV-30X Bill Validator

Table 1-5 DBV-30X-SX Structural Specifications

Nº	CONDITION	SPECIFICATION
1	Mounting	Vertical Mounting only (verify with your sales representative prior to selecting a final attachment method).
2	Weight	Approximately 2.65 Lbs (~1.2kg)
3	SD Unit Outline Dimensions	With a 200 Note Type "A" SD Cash Box: 4.196 inches (W) x 10.594 inches (H) x 6.102 inches (D) (106.6mm [W] x 269.1mm [H] x 155mm [D]) With a 300 Note Type "B" SD Cash Box: 4.196 inches (W) x 10.594 inches (H) x 6.633 inches (D) (106.6mm [W] x 269.1mm [H] x 168.5mm [D]) With a 500 Note Type "C" SD Cash Box: 4.295 inches (W) x 10.696 inches (H) x 7.677 inches (D) (109.1mm [W] x 271.7mm [H] x 195mm [D]) With a 1000 Note Type "D" SD Cash Box: 4.370 inches (W) x 10.696 inches (H) x 11.476 inches (D) (111.1mm [W] x 271.7mm [H] x 291.5mm [D])
	SU Unit Outline Dimensions	With a 200 Note Type "A" SU Cash Box: 4.196 inches (W) x 9.669 inches (H) x 6.102 inches (D) (106.6mm [W] x 245.6mm [H] x 155mm [D]) With a 300 Note Type "B" SU Cash Box: 4.196 inches (W) x 9.826 inches (H) x 6.633 inches (D) (106.6mm [W] x 249.6mm [H] x 168.5mm [D]) With a 500 Note Type "C" SU Cash Box: 4.196 inches (W) x 9.826 inches (H) x 7.677 inches (D) (106.6mm [W] x 249.6mm [H] x 195mm [D]) With a 1000 Note Type "D" SU Cash Box: 4.196 inches (W) x 9.826 inches (H) x 11.476 inches (D) (106.6mm [W] x 249.6mm [H] x 291.5mm [D])

Retrieving Banknotes

1. Pull the Cash Box release lever in the Arrow ① direction illustrated in Figure 1-11.
2. Lift the Cash Box in the ② arrow direction and remove it.

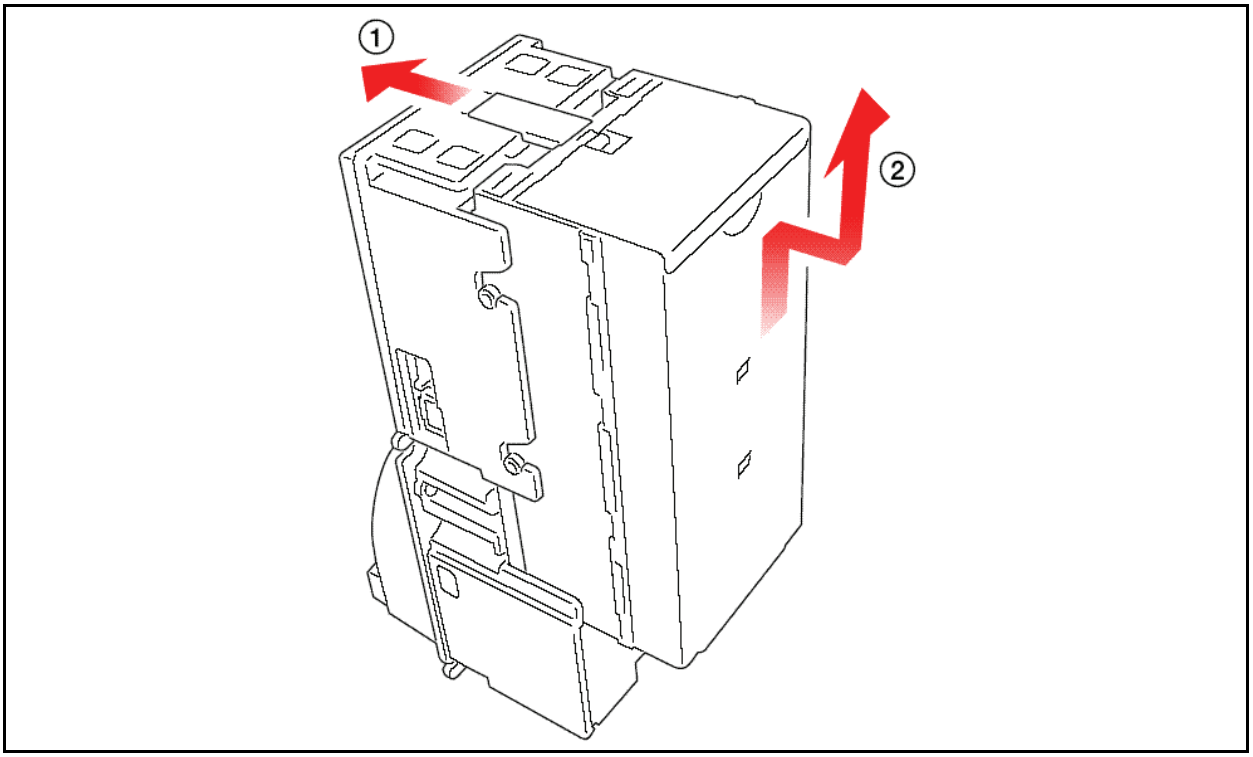

Figure 1-11 Initial Banknote Retrieval Steps

3. Open the Cash Box cover in the ③ Arrow direction illustrated in Figure 1-12. Remove the Banknotes in the ④ Arrow direction.

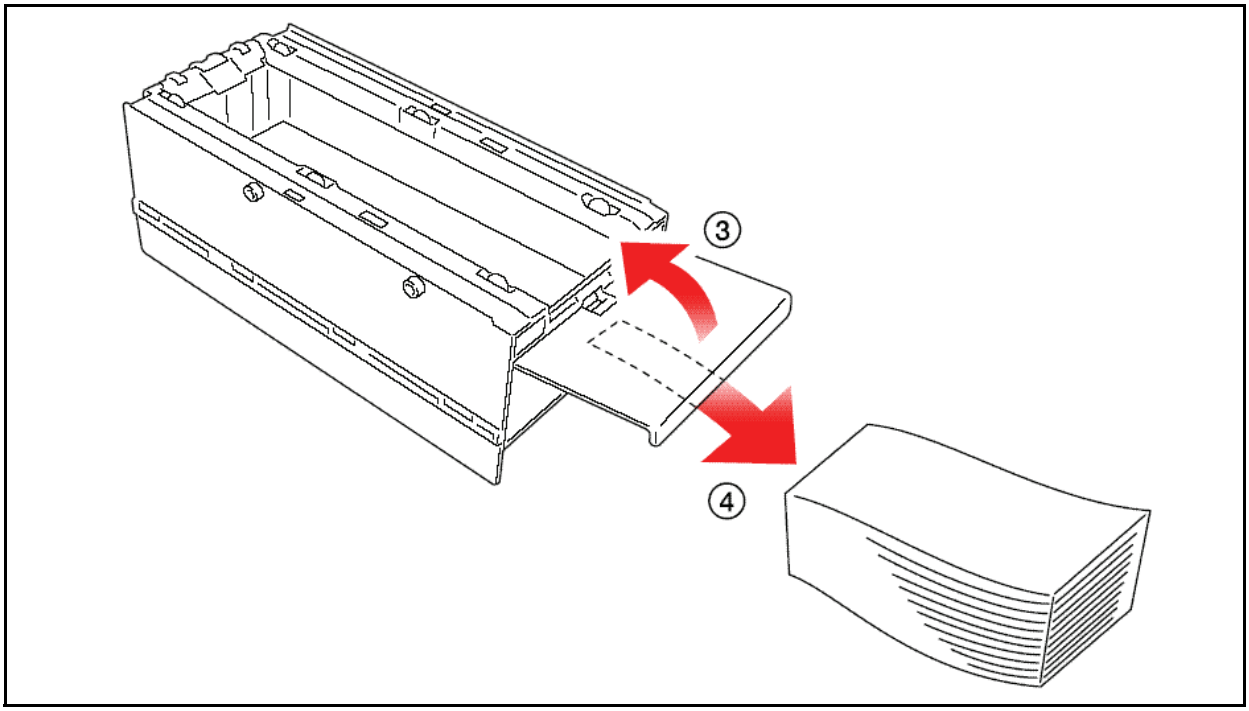

Figure 1-12 Final Banknote Retrieval Steps

DBV-30X-SU w/Type A Cash Box Dimensions

Figure 1-13 illustrates the relative dimensions of the DBV-30X-SU Bill Validator with a Type “A” Note Cash Box.

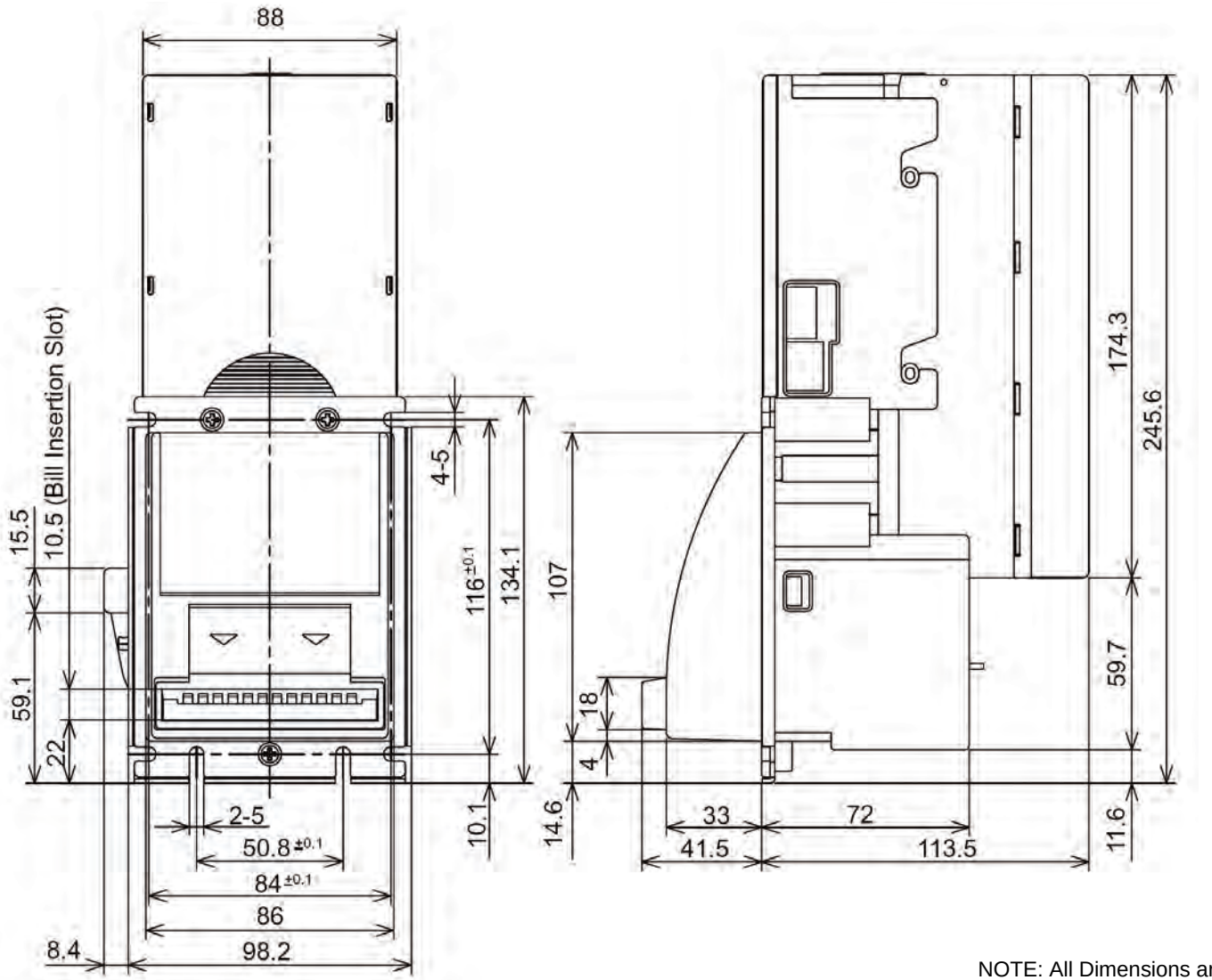

NOTE: All Dimensions are in Millimeters.

Figure 1-13 DBV-30X -SU Bill Validator Dimensions with Type “A” Note Cash Box (Part 1)

DBV-30X-SU w/Type B Cash Box Dimensions (Part 2 Continued)

Figure 1-14 illustrates the relative dimensions of the DBV-30X-SU Bill Validator with a Type “B” Note Cash Box.

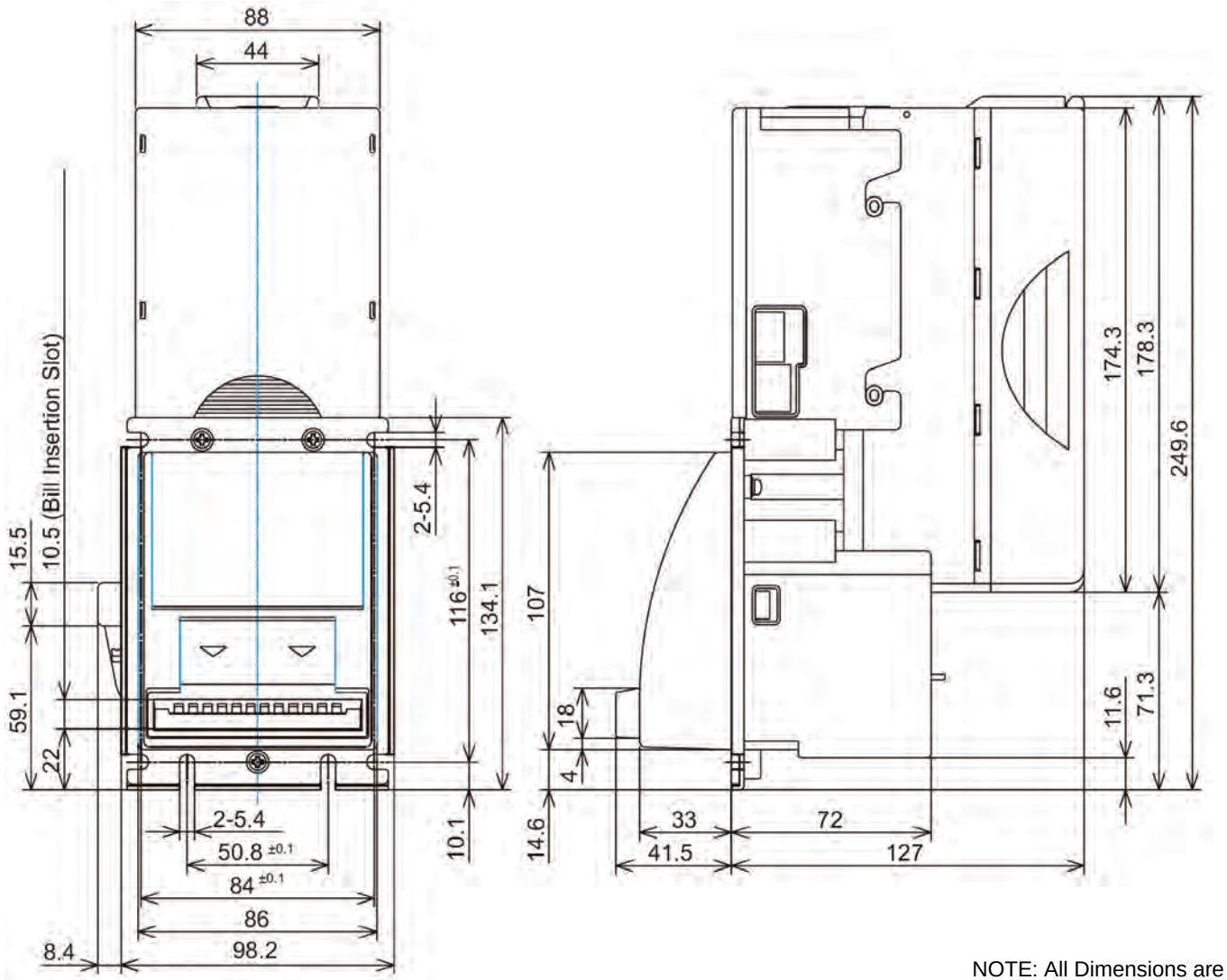

NOTE: All Dimensions are in Millimeters.

Figure 1-14 DBV-30X -SU Bill Validator Dimensions with a Type “B” Note Cash Box (Part 2)

DBV-30X-SU w/Type C Cash Box Dimensions (Part 3 Continued)

Figure 1-15 illustrates the relative dimensions of the DBV-30X-SU Bill Validator with a Type “C” Note Cash Box.

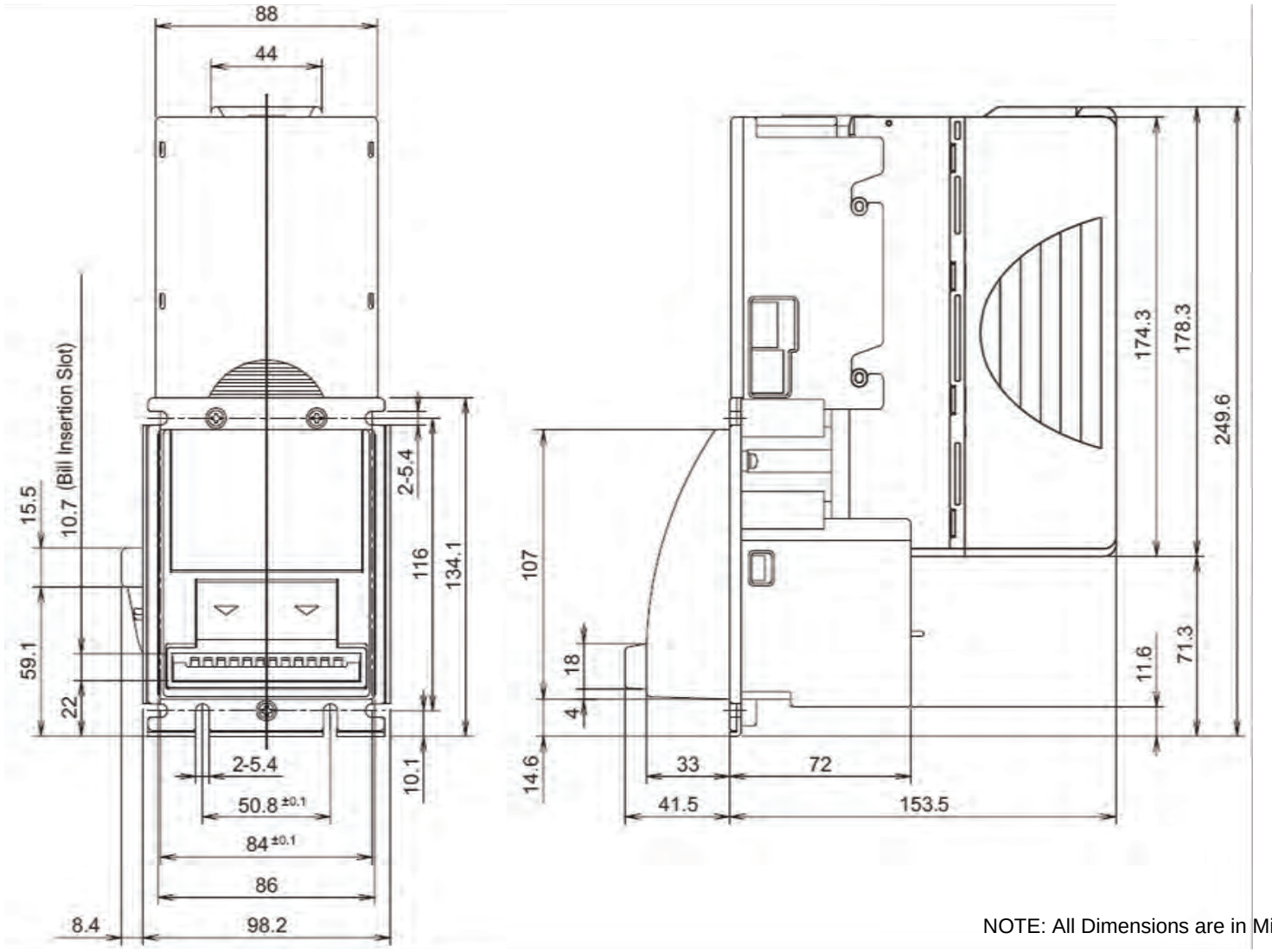

NOTE: All Dimensions are in Millimeters.

Figure 1-15 DBV-30X -SU Bill Validator Dimensions with a Type “C” Note Cash Box (Part 3)

DBV-30X-SU w/Type D Cash Box Dimensions (Part 4 Continued)

Figure 1-16 illustrates the relative dimensions of the DBV-30X-SU Bill Validator with a Type “D” Note Cash Box.

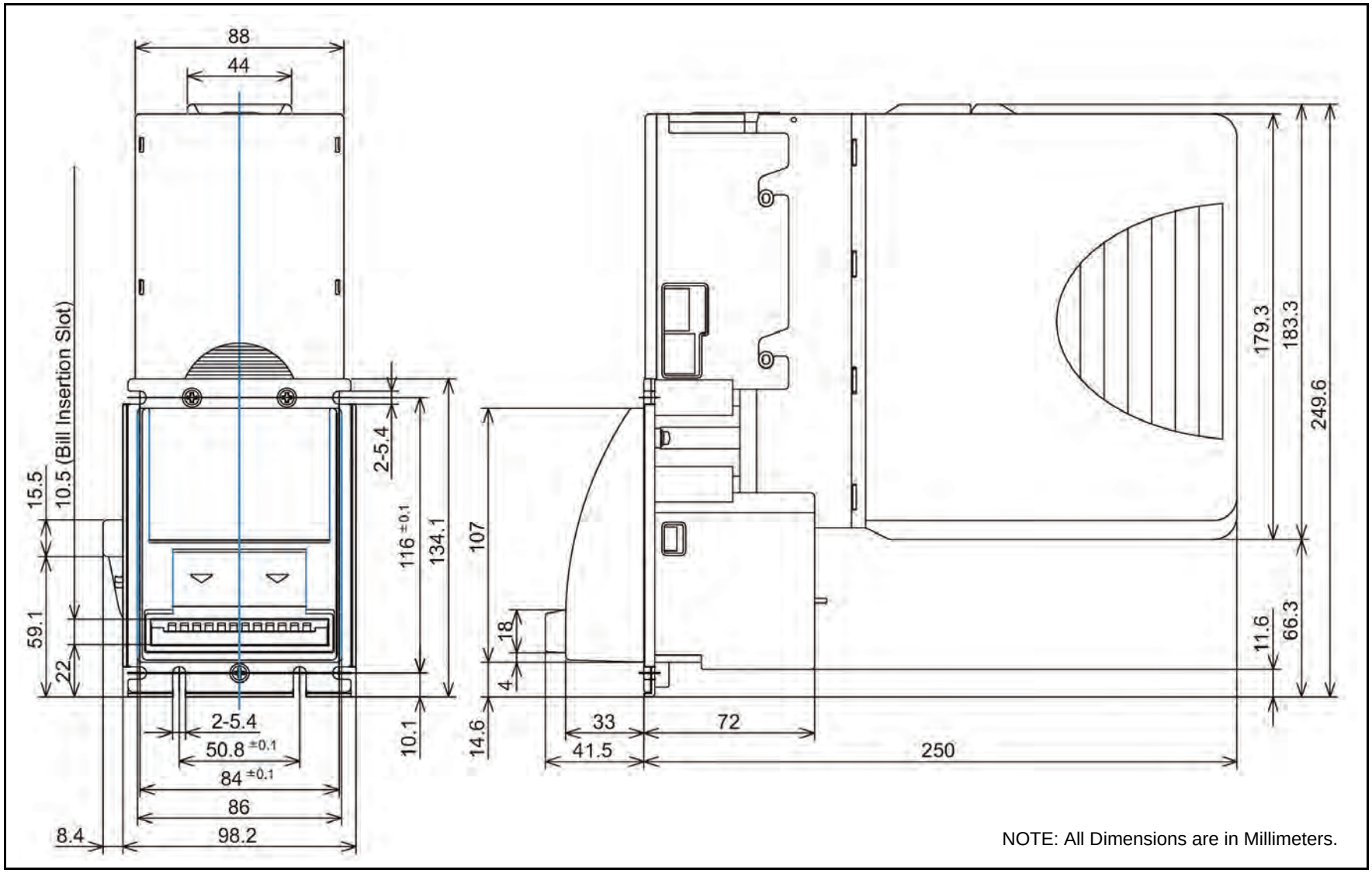

Figure 1-16 DBV-30X -SU Bill Validator Dimensions with a Type “D” Note Cash Box (Part 4)

DBV-30X-SD w/Type A Cash Box Dimensions

Figure 1-17 illustrates the relative dimensions of the DBV-30X-SD Bill Validator with a Type “A” Note Cash Box.

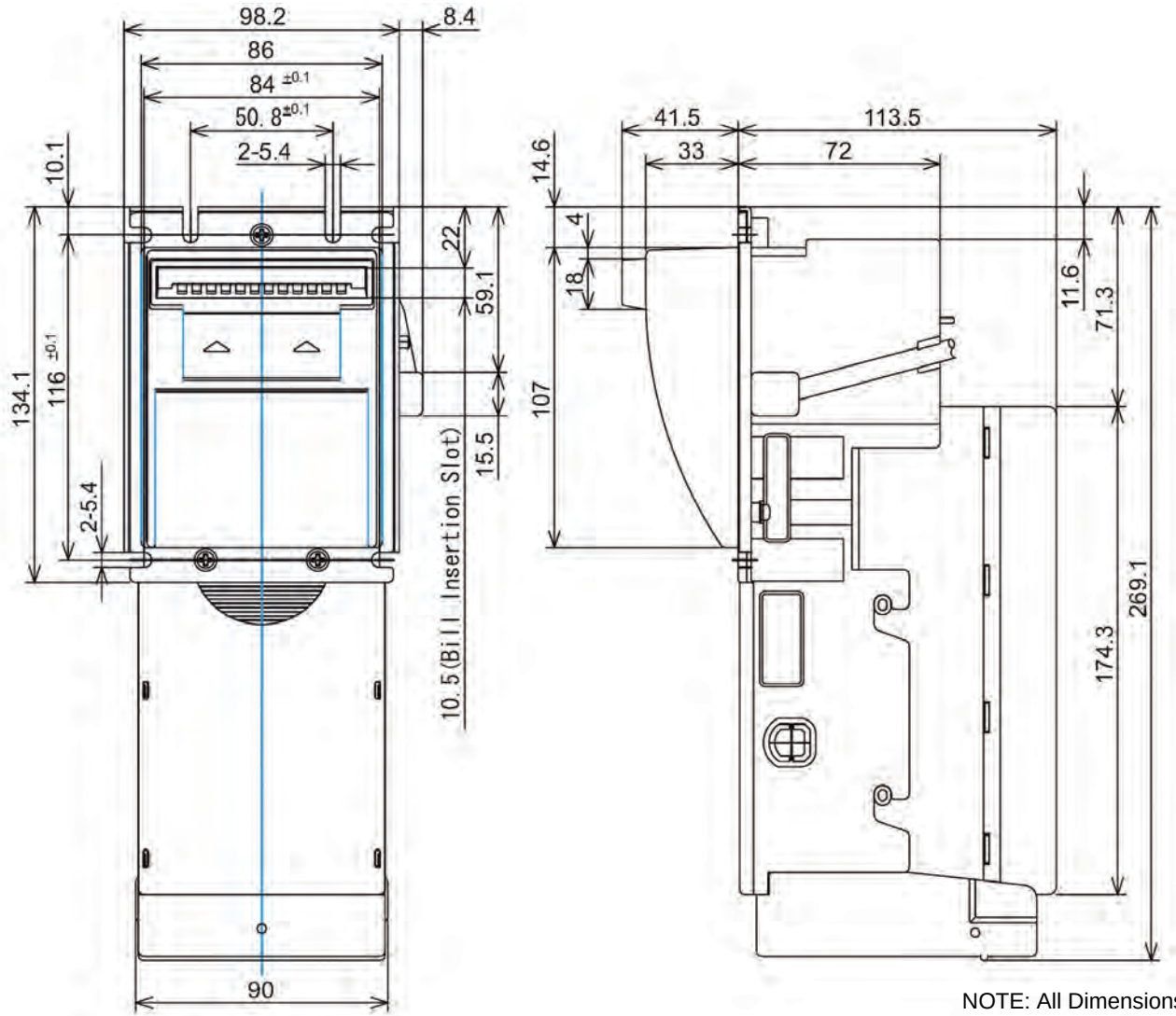

NOTE: All Dimensions are in Millimeters.

Figure 1-17 DBV-30X -SD Bill Validator Dimensions with a Type “A” Note Cash Box (Part 1)

DBV-30X-SD w/Type B Cash Box Dimensions (Part 2 Continued)

Figure 1-18 illustrates the relative dimensions of the DBV-30X-SD Bill Validator with a Type “B” Note Cash Box.

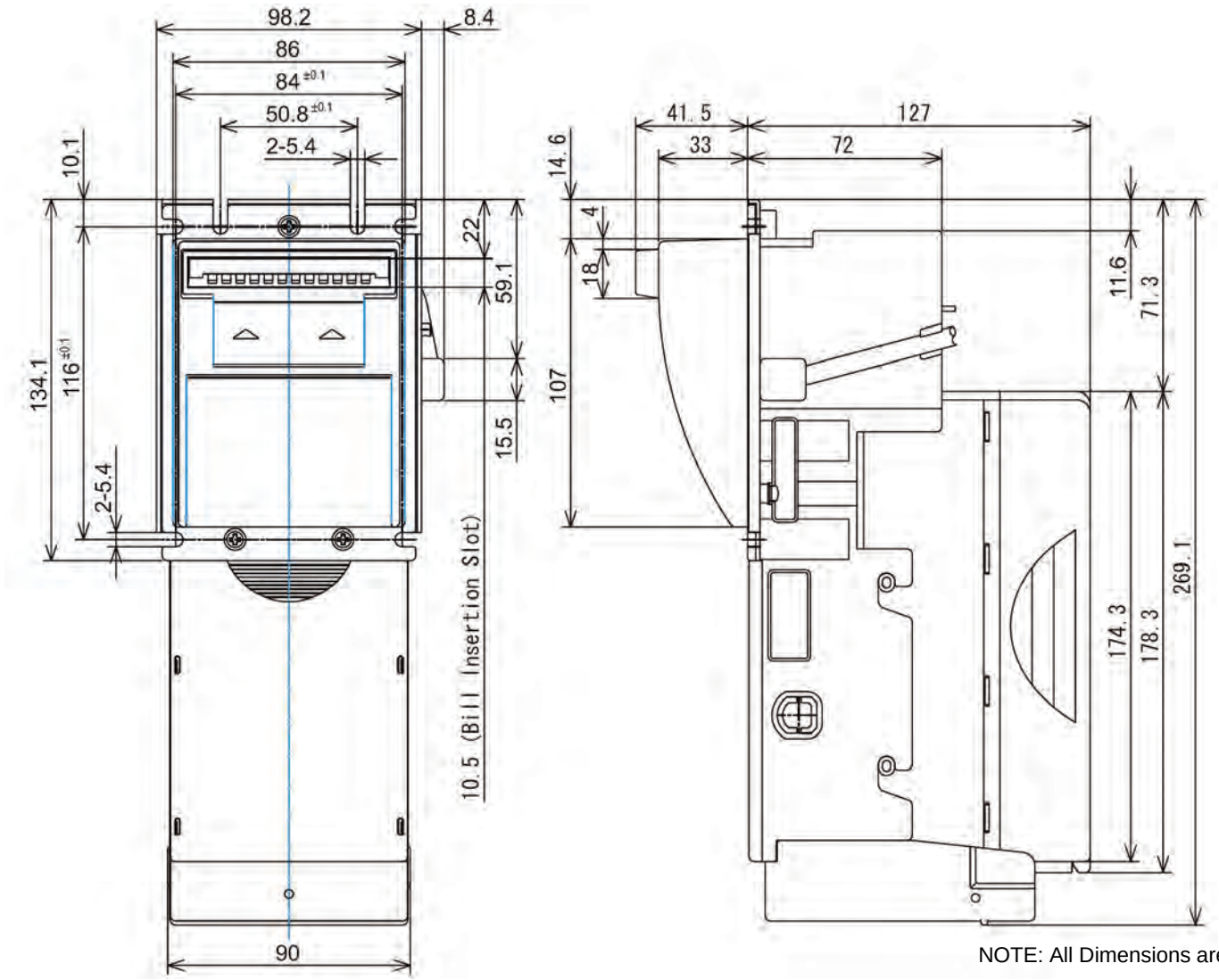

NOTE: All Dimensions are in Millimeters.

Figure 1-18 DBV-30X -SD Bill Validator Dimensions with a Type “B” Note Cash Box (Part 2)

DBV-30X-SD w/Type C Cash Box Dimensions (Part 3 Continued)

Figure 1-19 illustrates the relative dimensions of the DBV-30X-SD Bill Validator with a Type “C” Note Cash Box.

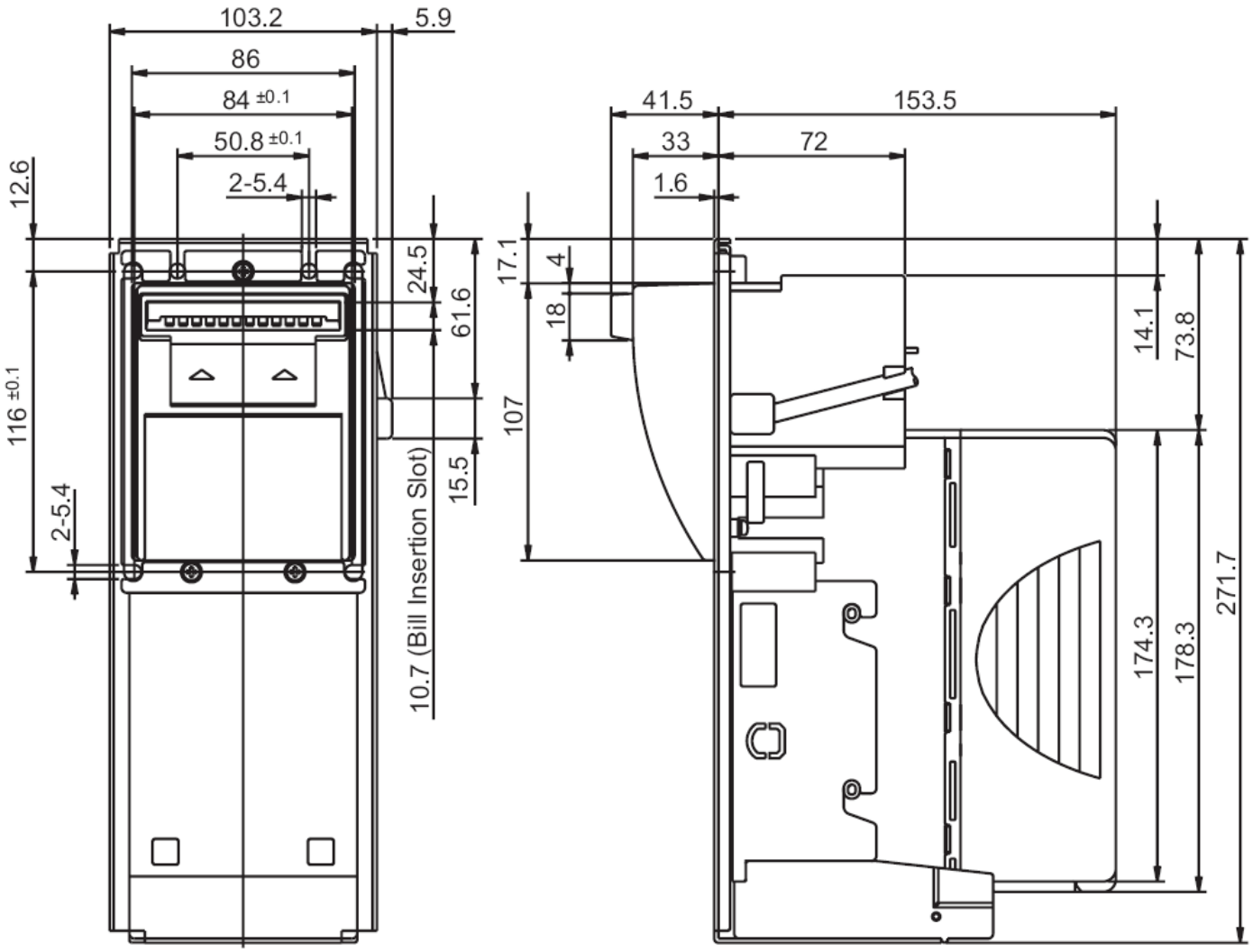

NOTE: All Dimensions are in Millimeters.

Figure 1-19 DBV-30X -SD Bill Validator Dimensions with a Type “C” Note Cash Box (Part 3)

DBV-30X-SD w/Type D Cash Box Dimensions (Part 4 Continued)

Figure 1-20 illustrates the relative dimensions of the DBV-30X-SD Bill Validator with a Type “D” Note Cash Box.

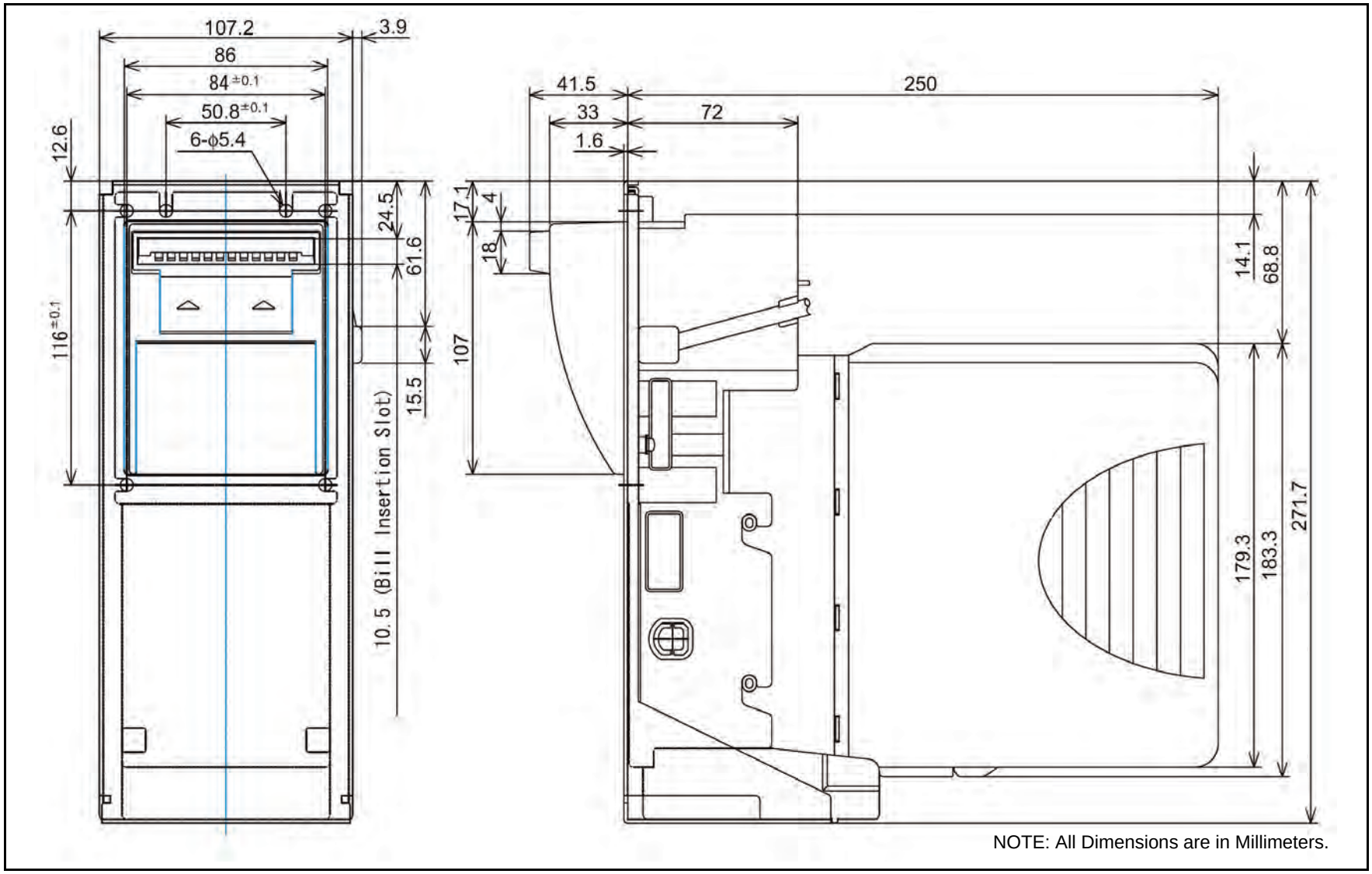

Figure 1-20 DBV-30X -SD Bill Validator Dimensions with a Type “D” Note Cash Box (Part 4)

DBV-30X-SD w/Type A Cash Box & Lock Assembly Dimensions (Part 5 Continued)

Figure 1-21 illustrates the relative dimensions of the DBV-30X-SD Bill Validator with a Type “A” Note Cash Box and Lock Assembly.

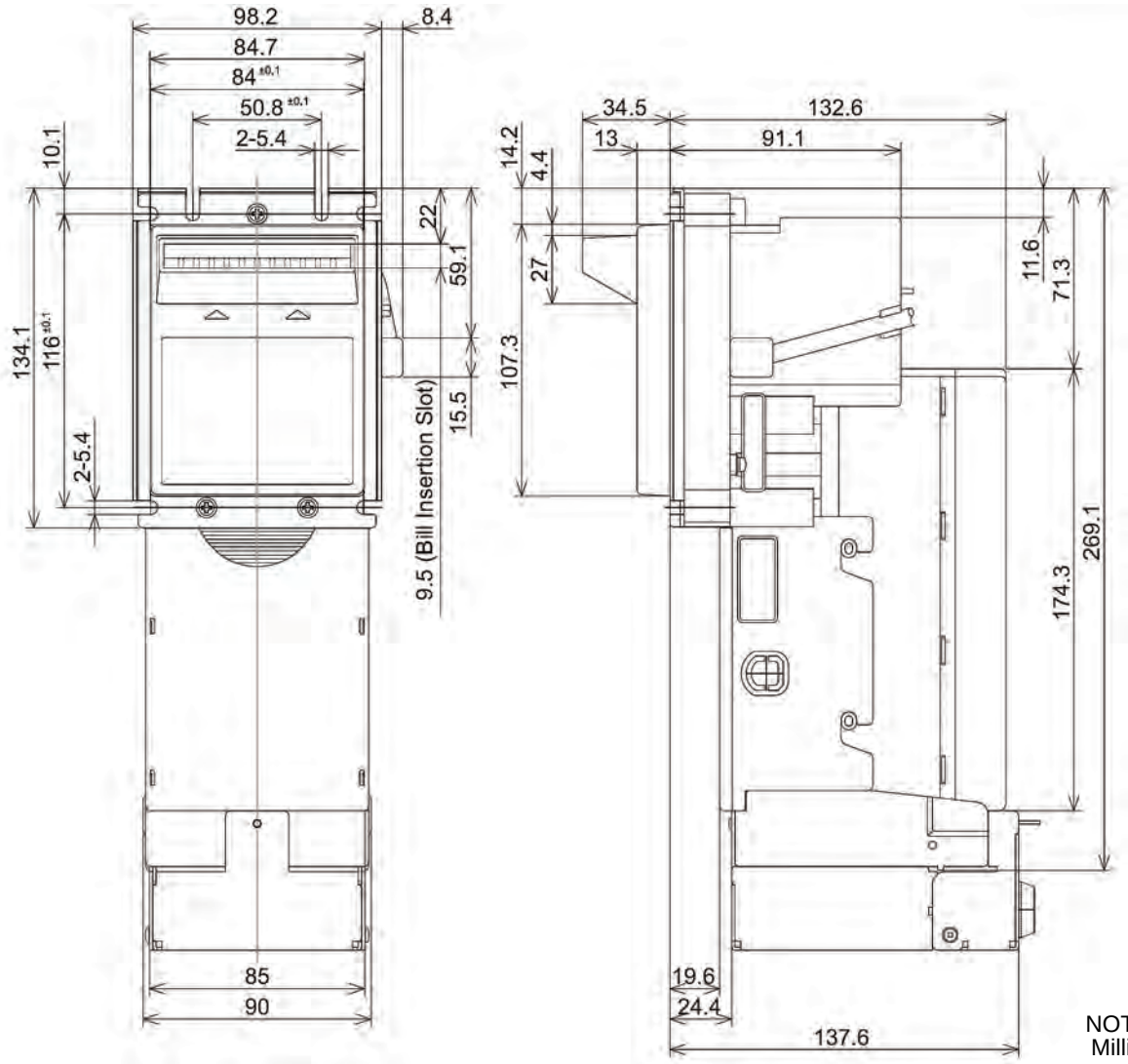

NOTE: All Dimensions are in Millimeters.

Figure 1-21 DBV-30X -SD Bill Validator Dimensions with a Type “A” Note Cash Box & Lock Assembly (Part 5)

DBV-30X-SD w/Type B Cash Box & Lock Assembly Dimensions (Part 6 Continued)

Figure 1-22 illustrates the relative dimensions of the DBV-30X-SD Bill Validator with a Type “B” Note Cash Box and Lock Assembly.

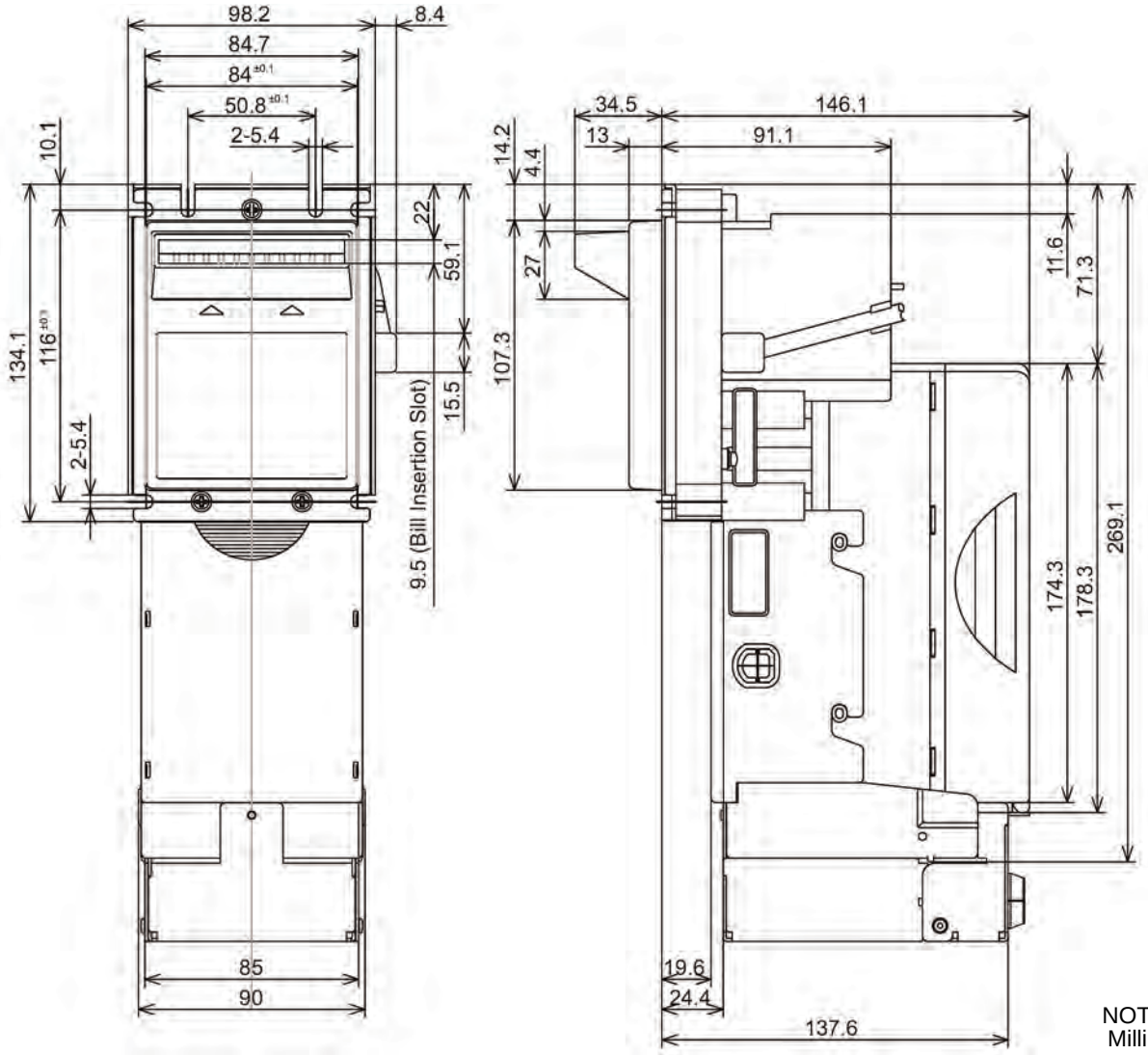

NOTE: All Dimensions are in Millimeters.

Figure 1-22 DBV-30X -SD Bill Validator Dimensions with a Type “B” Note Cash Box & Lock Assembly (Part 6)

DBV-30X-SD w/Type C Cash Box & Lock Assembly Dimensions (Part 7 Continued)

Figure 1-23 illustrates the relative dimensions of the DBV-30X-SD Bill Validator with a Type “C” Note Cash Box and Lock Assembly.

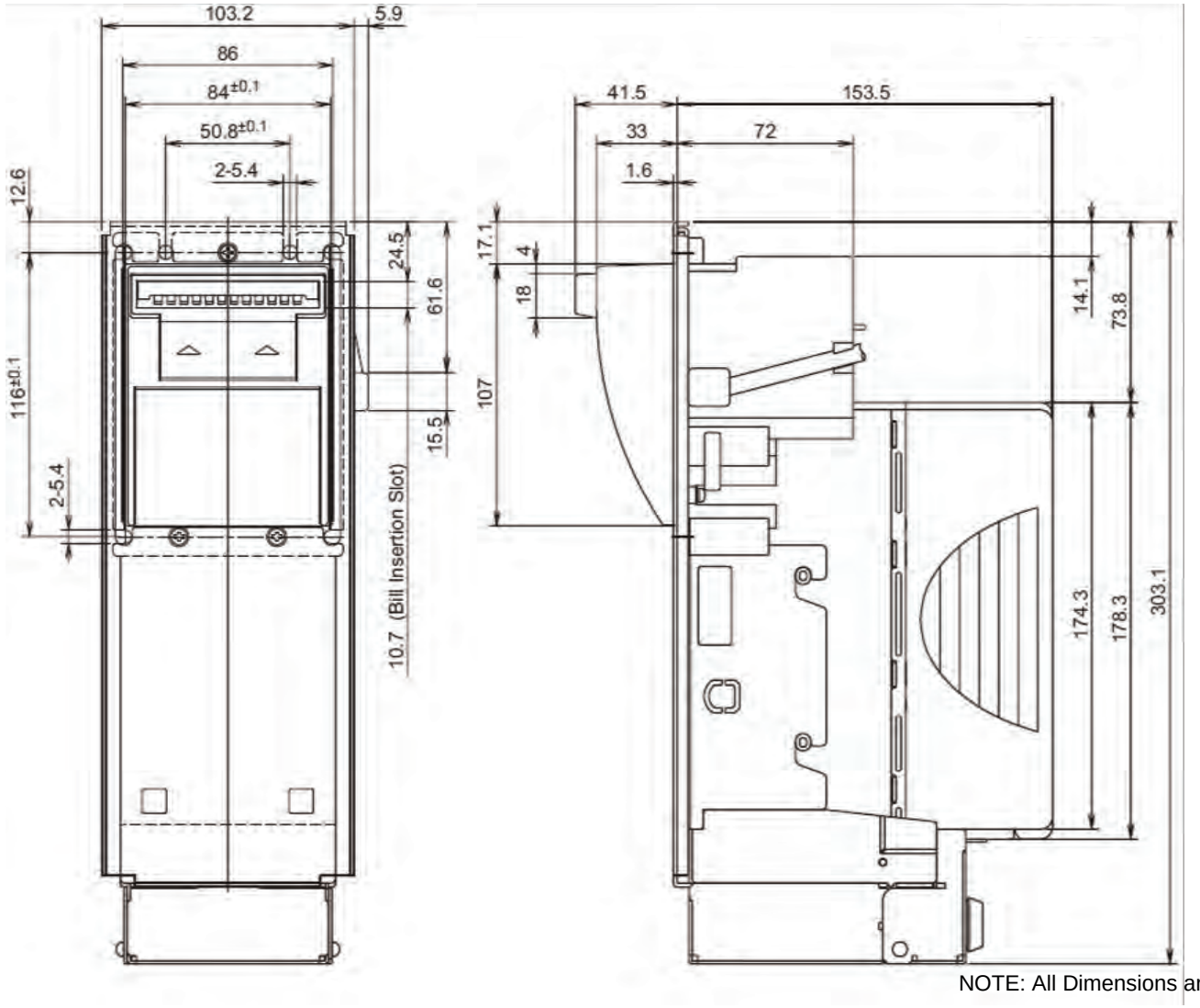

NOTE: All Dimensions are in Millimeters.

Figure 1-23 DBV-30X -SD Bill Validator Dimensions with a Type “C” Note Cash Box & Lock Assembly (Part 7)

DBV-30X-SD w/Type D Cash Box & Lock Assembly Dimensions (Part 8 Continued)

Figure 1-24 illustrates the relative dimensions of the DBV-30X-SD Bill Validator with a Type “D” Note Cash Box and Lock Assembly.

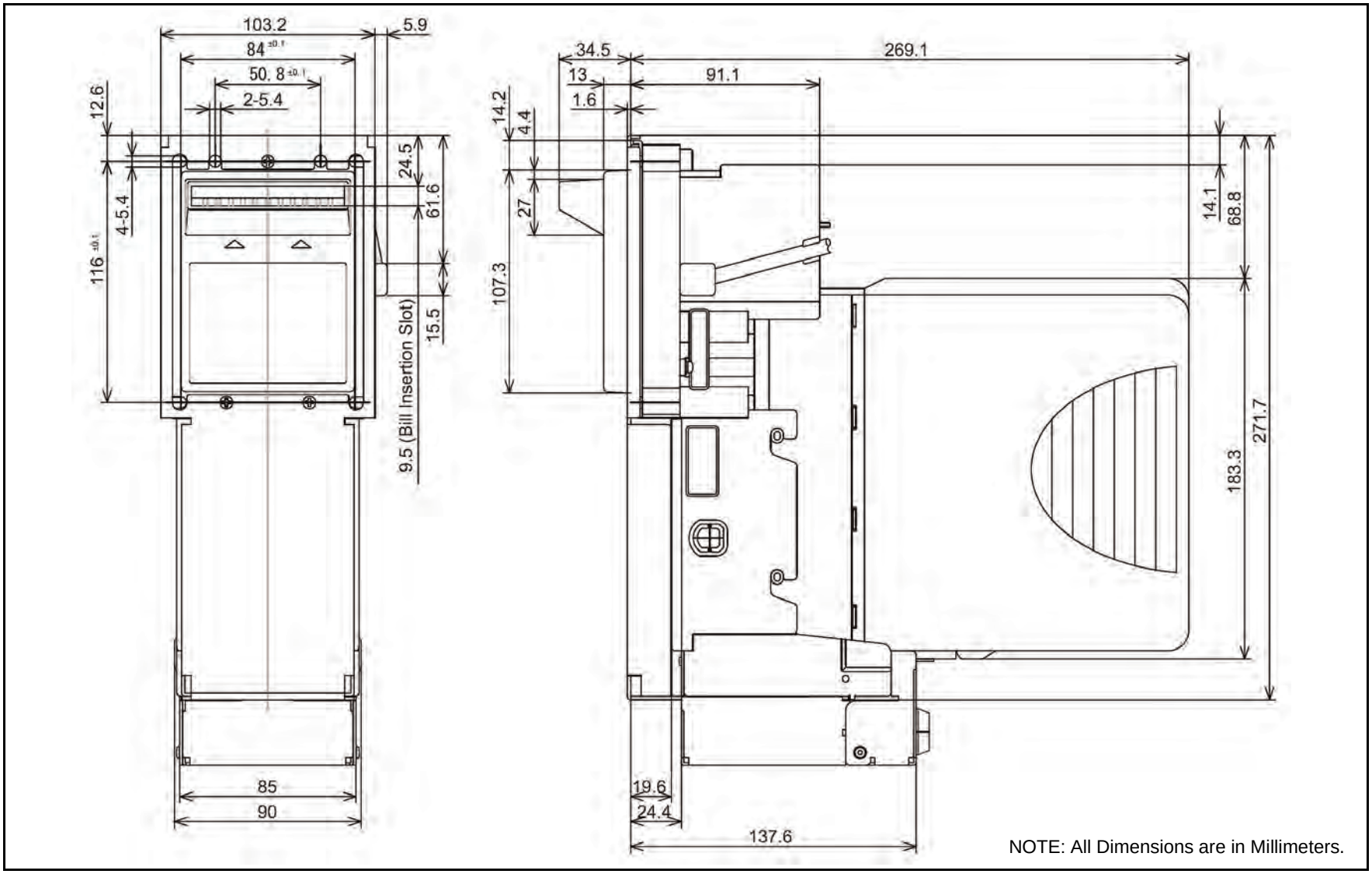

Figure 1-24 DBV-30X -SD Bill Validator Dimensions with a Type “D” Note Cash Box & Lock Assembly (Part 8)

THIS PAGE INTENTIONALLY LEFT BLANK

Cash Box Label

Figure 1-25 and Figure 1-26 illustrate the various Cash Box Labels.

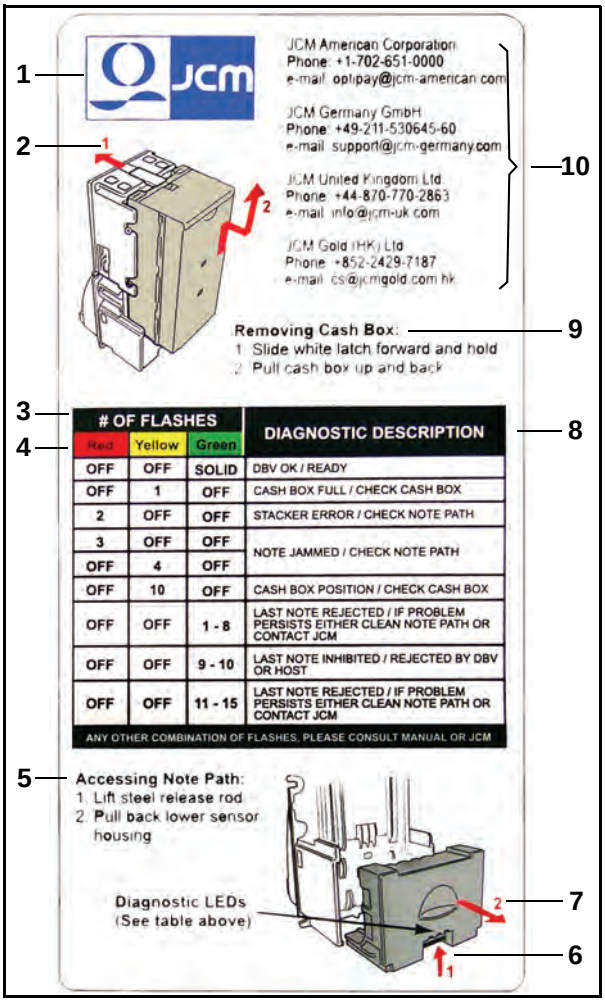

Figure 1-25 Cash Box Front Label

Table 1-6 Cash Box Label Features

1.	JCM Global Logo.	**6.**	Note path access step instruction arrows (related to #5)
2.	Cash Box removal step instruction arrows	**7.**	Column labeling Diagnostic LED location listings
3.	Diagnostic LED Flash indication columns label	**8.**	Diagnostic description column
4.	Diagnostic LED column color labels	**9.**	Cash Box removal step instructions
5.	Note path access step instructions	**10.**	JCM contact information

Table 1-7 DIP Switch Label Features

1.	JCM Logo	**4.**	Arrow addressing actual position of DIP Switches and I/O header connector locations (Label is restricted to vertical placement positioning)
2.	JCM contact information	**5.**	Interface Connector diagram
3.	Diagnostic/Inhibit DIP Switch position label (Large block in early version & small block in later version)	**6.**	Interface small DIP Switch Block switch position label.

DIP Switch Label

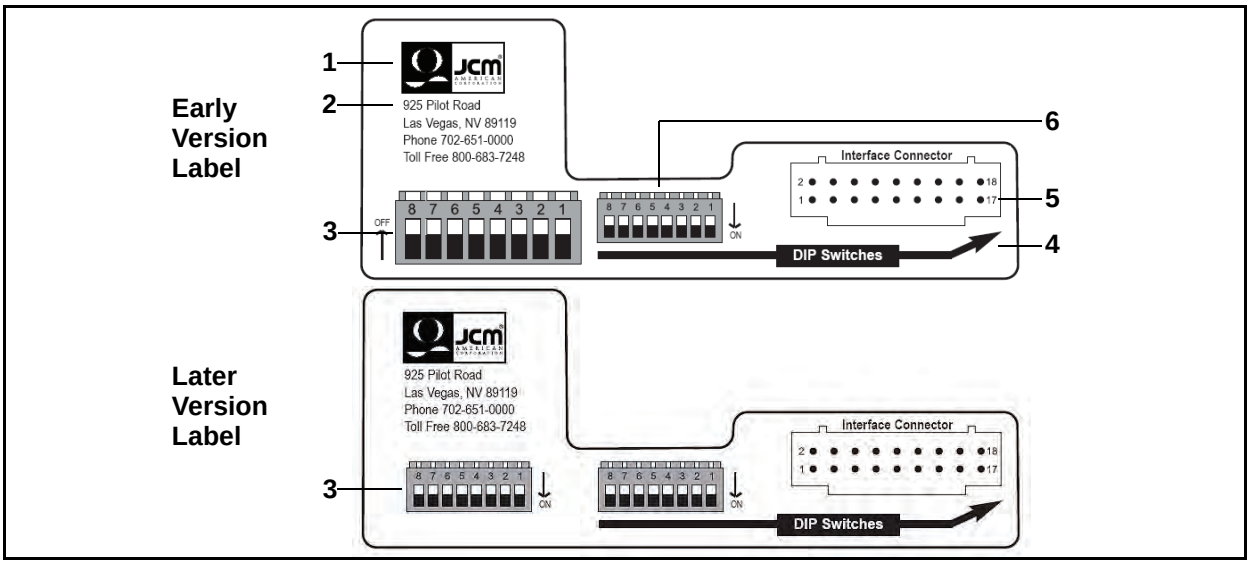

Figure 1-26 Early & Later Version DIP Switch Side Labels

Country Codes

Table 1-8 Country Codes

Country	Country Code
Antilles	ANT
Argentine	ARG
Australia	AUS
Austria	AUT
Austria	AUT4
Barbados	BRB
Belgium	BEL
Botswana	BWA
Brazil	BRA
Bulgaria	BGR
Canada	CAN
Canada	CAN
Chile	CHL
China	CHN
Colombia	COL
Costa Rica	CRI
Croatia	HRV
Cyprus	CYP
Czech Republic	CZE
Denmark	DNK
Estonia	ESTE
Estonia	EST2
European Union	EUR
Finland	FIN
France	FRA
Germany	DEU
Germany	DEU1
Germany	DEU2
Germany/Sweden	DEU/SWE
Great Britain (England)	GBR
Great Britain (England)	GBR-B
Great Britain/Gibraltar	GBR/GBI
Great Britain/Isle Of Man	GBR/MAN
Greece	GRC
Greece	GRC-B
Guatemala	MGT
Honduras	HND
Hong Kong	HKG
Hungary	HUN
Iceland	ISL
India	IND
Israel	ISR
Italy	ITA
Italy	ITA8

Table 1-8 Country Codes (Continued)

Country	Country Code
Italy	ITA9
Japan	JPN
Kazakhstan	KAZ
Kazakhstan	KAZ1
Latvia	LVA
Lithuania	LTU
Malaysia	MYS
Malaysia	MYS1
Malta	MLT
Mauritius	MUS
Mexico	MEX
Moldova	MDA
Morocco	MAR
Namibia	NAM
Netherlands	NLD
Netherlands	NLD-B
New Zealand	NZL
New Zealand	NZL1
New Zealand	NZL-B
North Ireland	NIRL
Norway	NOR
Norway	NOR1
Peru	PER
Peru	PER1
Philippines	PHL
Philippines	PHL1
Poland	POL
Poland	POL1
Poland	POL1-B
Portugal	PRT
Qatar	QAT
Republic Of Ireland	IRL
Republic Of Korea	KOR
Republic Of Korea	KOR-B
Romania	ROM
Russia	RUS
Russia	RUS-B
Saudi Arabia	SAU
Singapore	SGP
Singapore	SGP-B
Slovakia	SVK
Slovenia	SVN
South Africa	ZAF
Spain	ESP

Table 1-8 Country Codes (Continued)

Country	Country Code
Sri Lanka	LKA
Sweden	SWE
Switzerland	CHE
Switzerland	CHE3
Switzerland	CHE-B
Taiwan (Republic Of China)	TWN
Tanzania	TZA
Thailand	THA
Trinidad & Tobago	TTO
Ukraine	UKR
Ukraine	UKR1
United Arab Emirates	ARE
United States	USA
Uruguay	URY
Uruguay	URY1
Venezuela	VEN
Venezuela	VEN1
Venezuela	VEN2
Venezuela	VEN-B

These Country Codes conform to the ISO 3166 Country Code list definitions.

THIS PAGE INTENTIONALLY LEFT BLANK

Optipay® BV
DBV-30X Bill Validator
Section 2

2 INSTALLATION / OPERATION

This section provides installation and operation instructions for the Optipay® BV DBV-30X Bill Validator. The information within contains the following features:

- Installation
- Input/Output Circuitry
- Pin Assignment
- Connector
- DIP Switch Settings
- Operation Flowchart
- Clearing a Bill Jam
- Preventive Maintenance

Installation

Mounting the Unit

Prepare to mount the DBV-30X Bill Validator as follows:

1. Remove the Cash Box and Lower Guide assembly (See Figure 2-1 ① and ②).

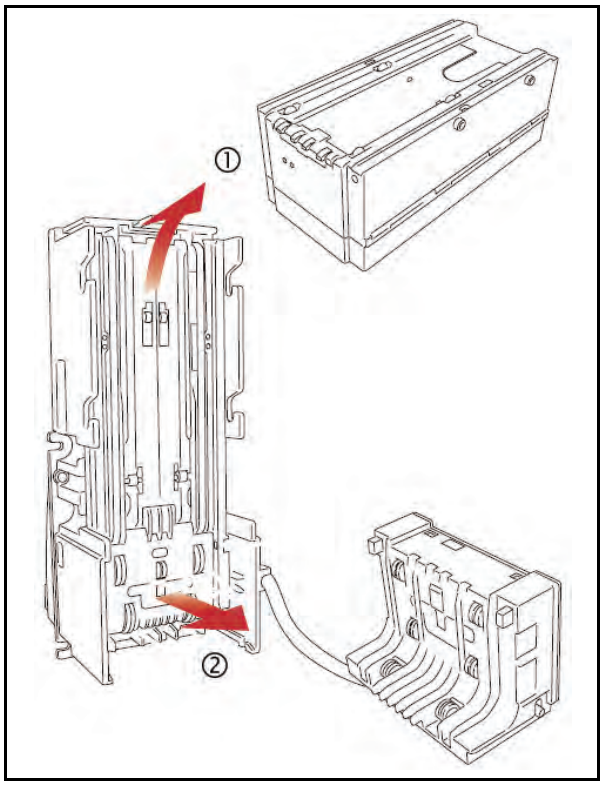

Figure 2-1 Bill Validator Mounting Preparation

2. Insert the DBV-30X unit into the panel cut out (See Figure 2-2).

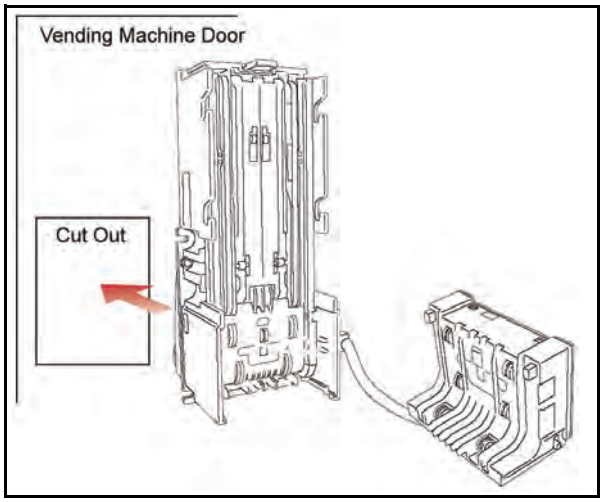

Figure 2-2 Bill Validator Mounting Location

3. Use four #8-32 nuts to mount the DBV in place at the four locations circled in Figure 2-3 ① through ④.

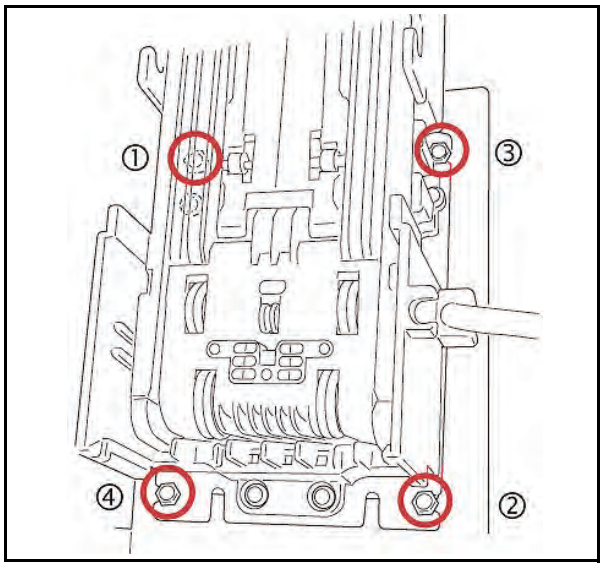

Figure 2-3 Bill Validator Mounting Nut Locations

4. Reinstall the Lower Guide and Cash Box.

Changing the Bill Guides

To change the DBV-30X Bill Guides proceed as follows:

1. Remove the Cash Box and Lower Guide.

2. Remove the Left and Right Side Bill Guides (SB) by following the ① and ② directional arrow paths indicated in Figure 2-4.

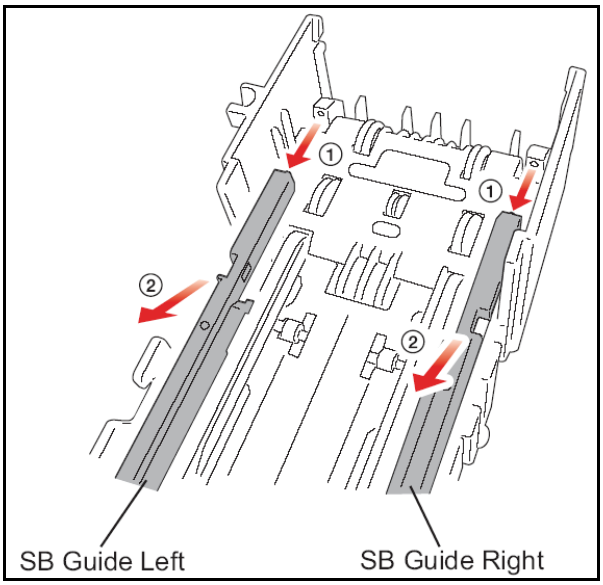

Figure 2-4 Bill Guide Removal

1. Remove the Standard Faceplate by removing its four (4) mounting screws (See Figure 2-5 ① through ④).

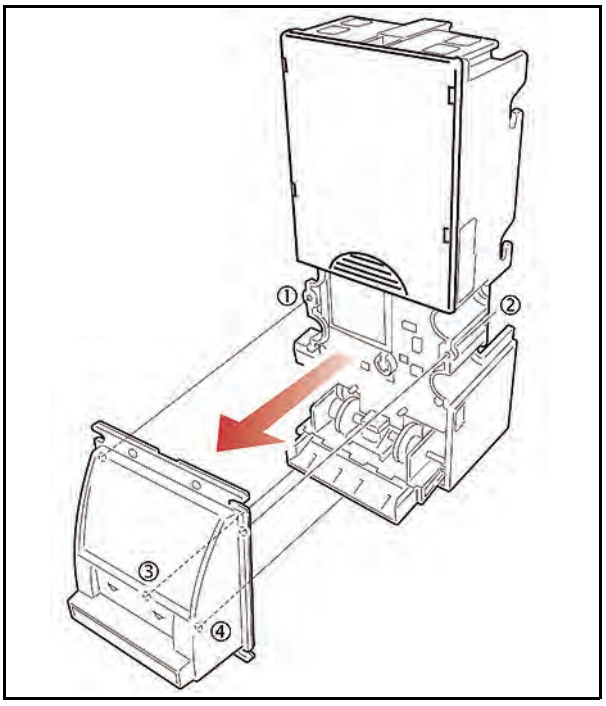

Figure 2-5 Standard Faceplate Removal

2. Remove the Front Bill Guide (FB) by following the arrow ③ direction indicated in Figure 2-6. Reverse the procedure to reinstall it.

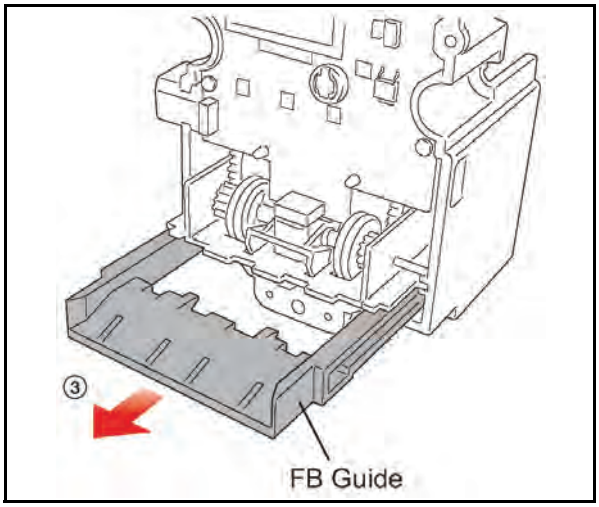

Figure 2-6 Front Bill Guide Removal

Snack Mask Installation

To install a Snack Mask Faceplate proceed as follows:

1. Remove the Standard Faceplate by removing its four (4) mounting screws (Review Figure 2-5 ① through ④).
2. Place the Window Spacer onto the DBV-30X unit as illustrated in Figure 2-7 ①.

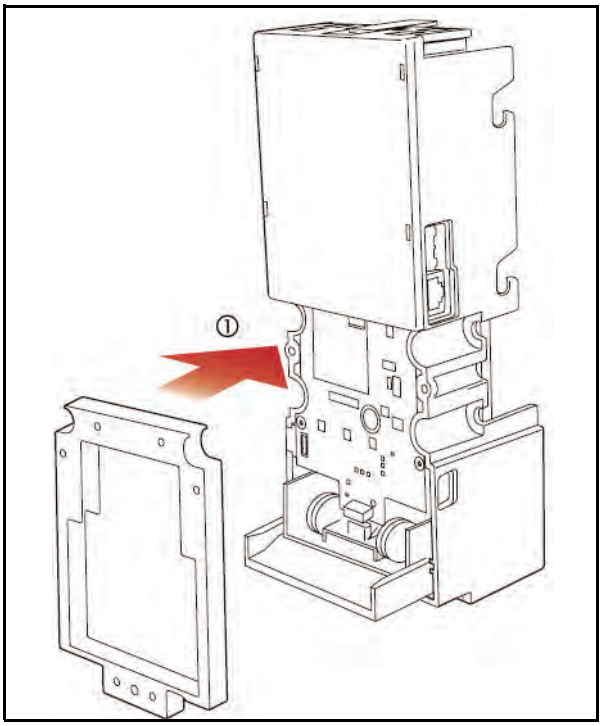

Figure 2-7 Window Spacer Placement

3. Place the Front Panel Bracket onto the Window Spacer as illustrated in Figure 2-8 ①.

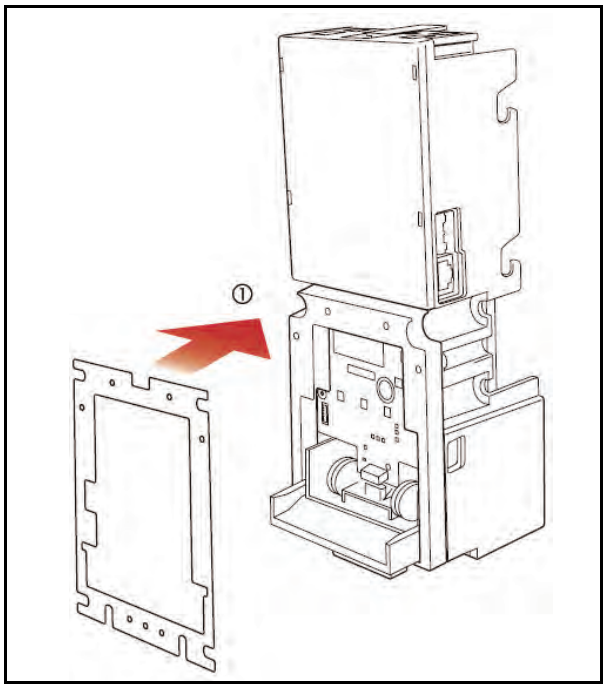

Figure 2-8 Front Panel Bracket Placement

4. Insert the mounting screws into the four (4) insertion holes located at the rear of the DBV-30X Unit and use a Phillips Screw-driver to tighten each screws securely in place (See Figure 2-9 ① through ④).

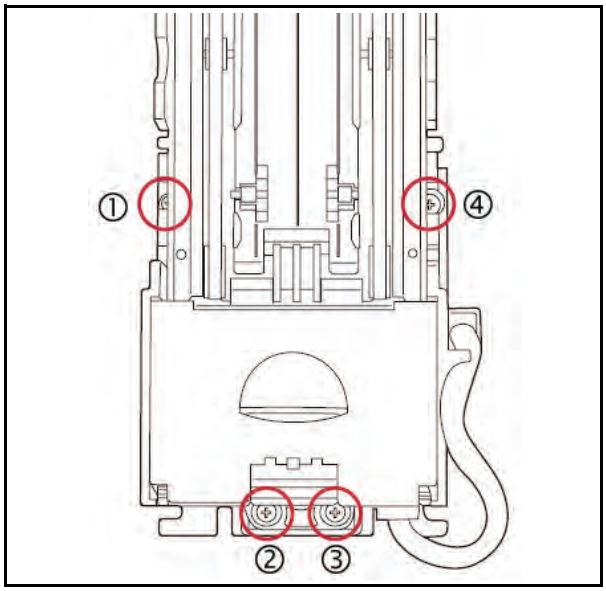

Figure 2-9 Securing Spacer and Panel Bracket

5. Place the Snack Mask Bezel onto the Front Panel Bracket and insert its mounting screws into the three (3) insertion holes provided. Use a Phillips Screwdriver to securely tighten each mounting screws in place (See Figure 2-10 ① through ②).

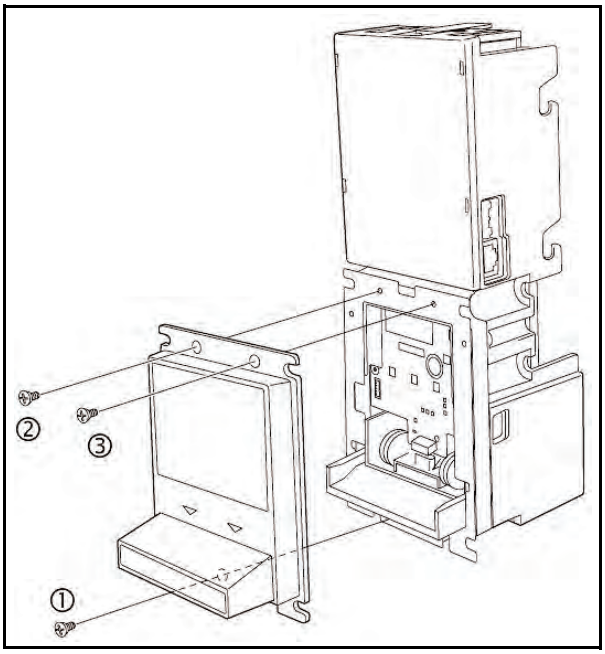

Figure 2-10 Securing Snack Mask in Place on a Standard DBV-30X

Installing an SD Module Base and Bracket

To install an SD Module Base and Bracket proceed as follows:

1. Prepare the SD Module Base by removing the Cash Box Release Lever on top of the DBV-30X (See Figure 2-11 ① and ②).

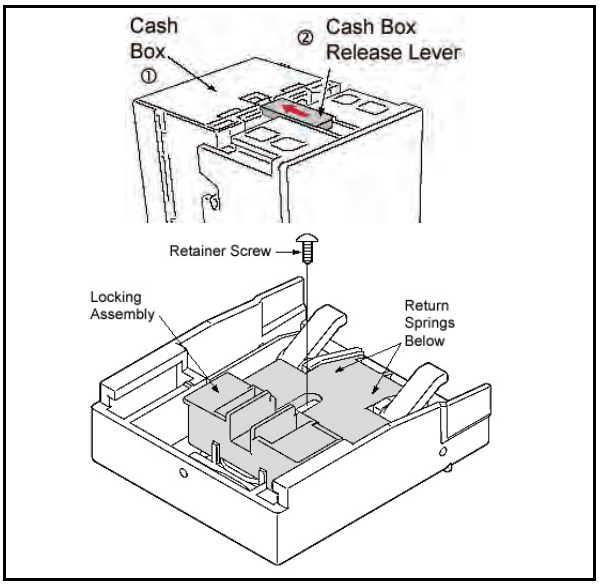

Figure 2-11 SD Module Base Preparation

NOTE: Earlier SD Modules did not contain a locking assembly Retainer Screw. DO NOT loose the return spring during the preparation process when installing this earlier style base!

2. Turn the DBV-30X Unit upside down and slide it backward until it locks in place on the SD Module Base (See Figure 2-12 ①).

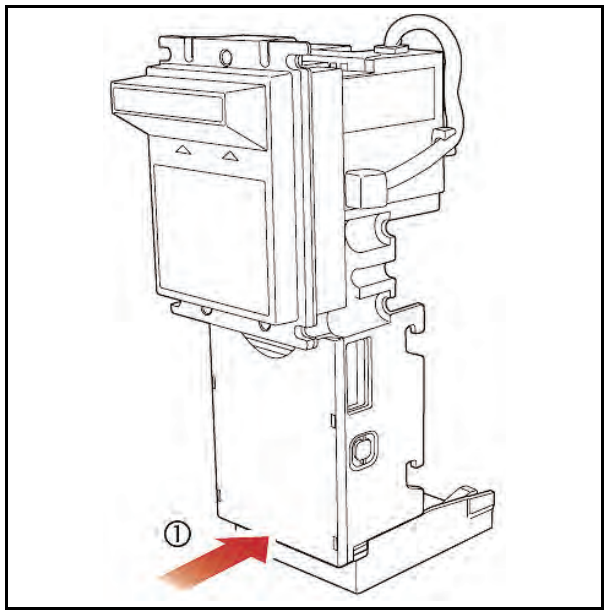

Figure 2-12 DBV-30X-SD Unit Placement

NOTE: The following step only needs to be followed when attaching a 1000 Note Cash Box to a DBV-30X-SD Unit.

3. Attach the SD Bracket to the DBV-30X-SD by inserting the three (3) mounting screws into insertion holes and use a Phillips Screwdriver to securely tighten each screw in place (See Figure 2-13 ① through ②).

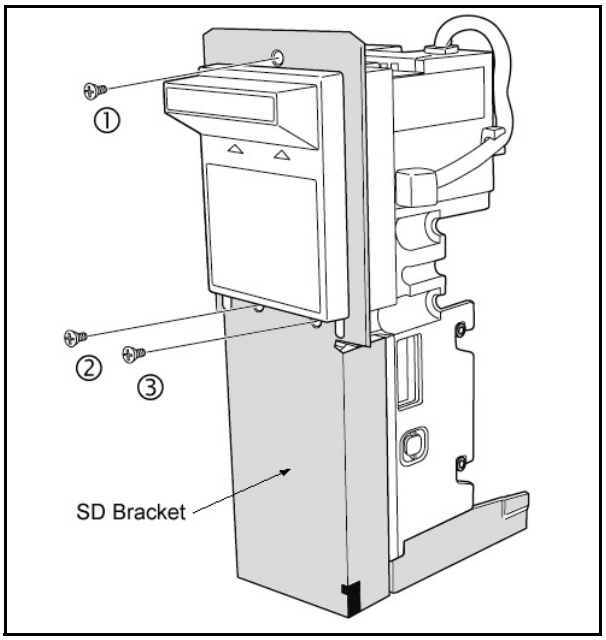

Figure 2-13 Securing Snack Mask in Place on a 1000 Note Cash Box DBV-30X-SD

Installing the Frame C Lock Module

To install a Frame C Lock Module proceed as follows:

1. Attach the Frame C Lock to the bottom of the SD Module Base and insert the mounting screws into the two (2) insertion holes. Use a Phillips Screwdriver to securely tighten each screw to mount the Lock Module in place onto the Module Base (See Figure 2-14).

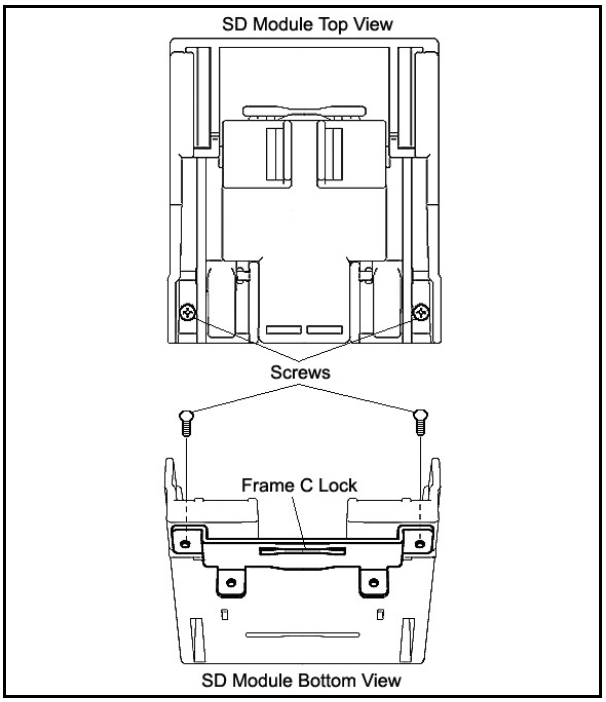

Figure 2-14 Mounting the Frame C Lock Module

2. Attach the Frame C Lock Module to the SD Module Base and insert the mounting screws into the three (3) insertion holes. Use a Phillips Screwdriver to securely tighten each screw to mount the module's together (See Figure 2-15 ① through ②).

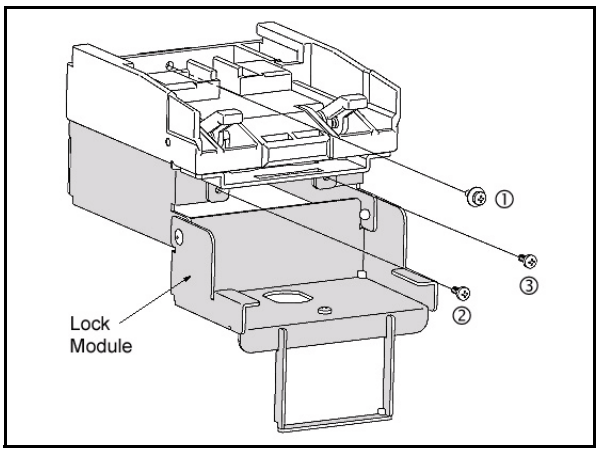

Figure 2-15 Mounting Lock Module on SD Module

Notice that one of the Mounting Screws comes with a Washer Collar; Place this screw on top (See Figure 2-15 ①).

3. Turn the DBV-30X unit upside down and slide it backward until it firmly locks onto the Lock Module Assembly (See Figure 2-16 ①).

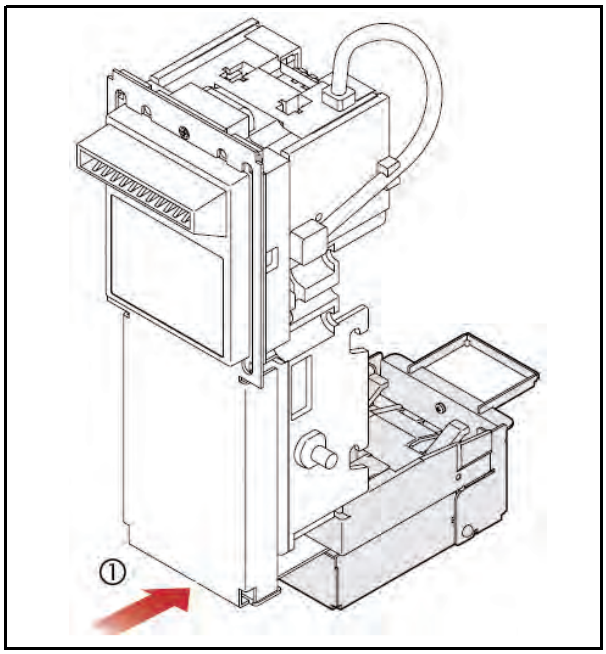

Figure 2-16 Mounting DBV onto Lock Module

NOTE: The SD Base Module is also required when installing the Lock Module onto a DBV-30X-SU type Unit. Follow the previous steps to install a Lock Module onto a DBV-30X-SU type Unit (See Figure 2-18 below).

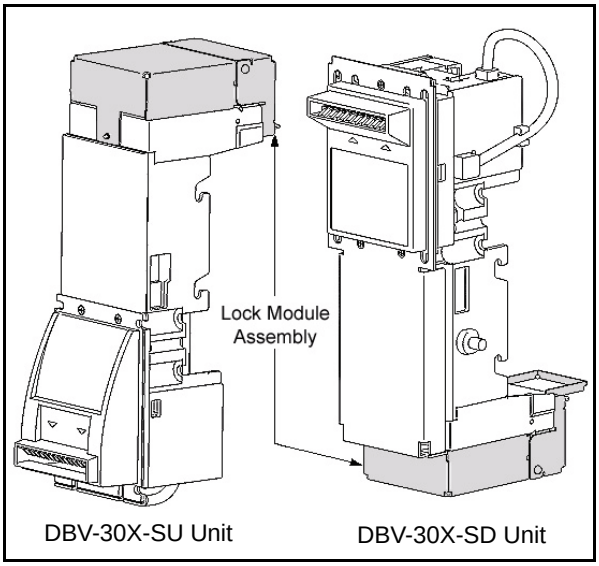

Figure 2-17 SD and SU Model Comparison

Collecting Bills

To remove bills from the Cash Box proceed as follows:

1. Push the Cash Box Release Lever in the direction indicated by the Figure 2-18 ① arrow.

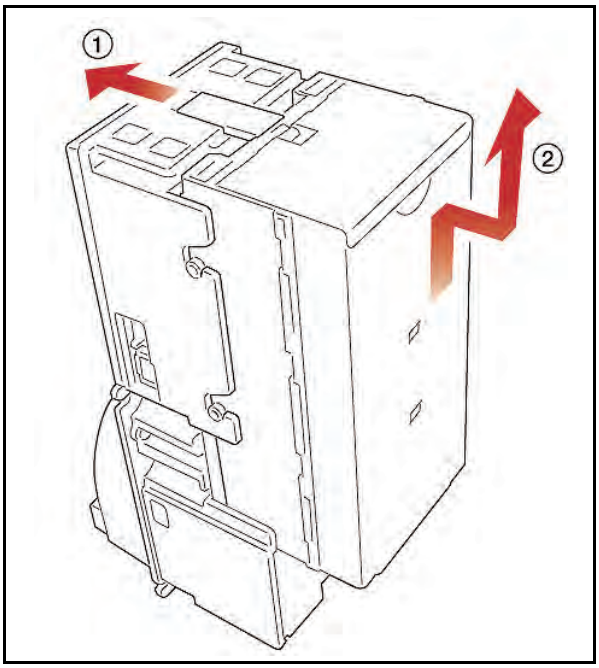

Figure 2-18 Cash Box Removal

2. Lift the Cash Box out in the in the direction indicated by the Figure 2-18 ② arrow and remove it.
3. Open the Cash Box cover and remove the bills (See Figure 2-19 ③ & ④).

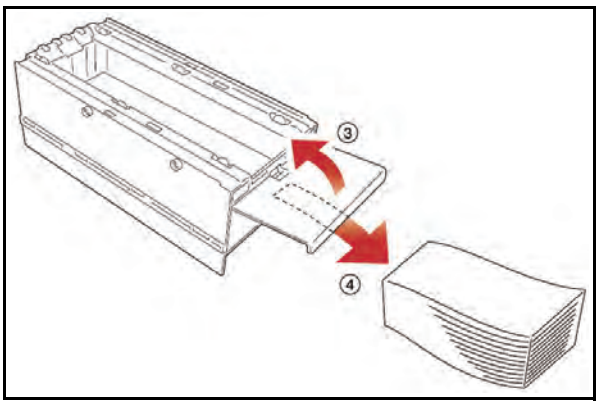

Figure 2-19 Cash Removal Process

NOTE: For procedures involving jammed bill clearing, refer to "Clearing a Bill Jam" on page 2-17 of this Section.

Input/Output Circuitry

Figure 2-20 illustrates the Bill Validator-to-Controller Photo Coupler component schematic and interconnecting pin designation diagram.

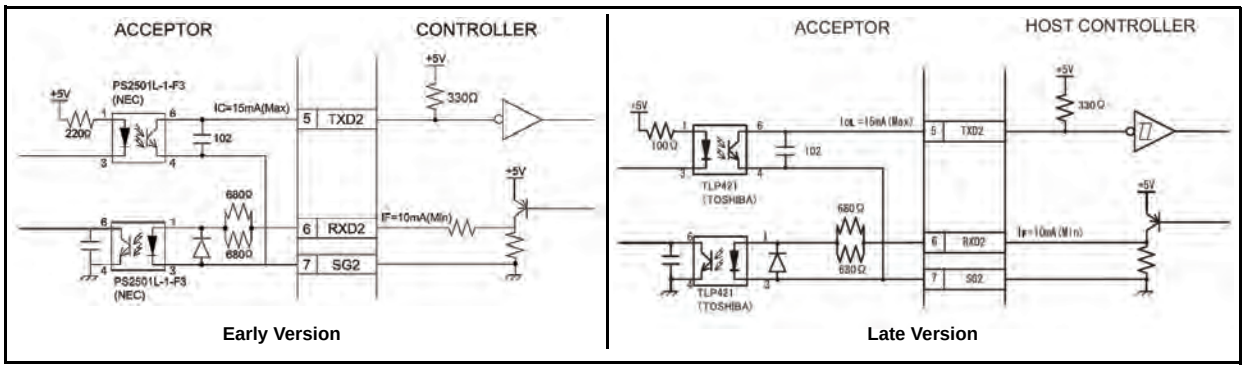

Figure 2-20 Bill Validator-to-Controller Photo Coupler I/O Circuit & Pin Assignment Schematics

Figure 2-21 illustrates the Bill Validator-to-Controller RS-232 and TTL component schematic and interconnecting pin designation diagrams.

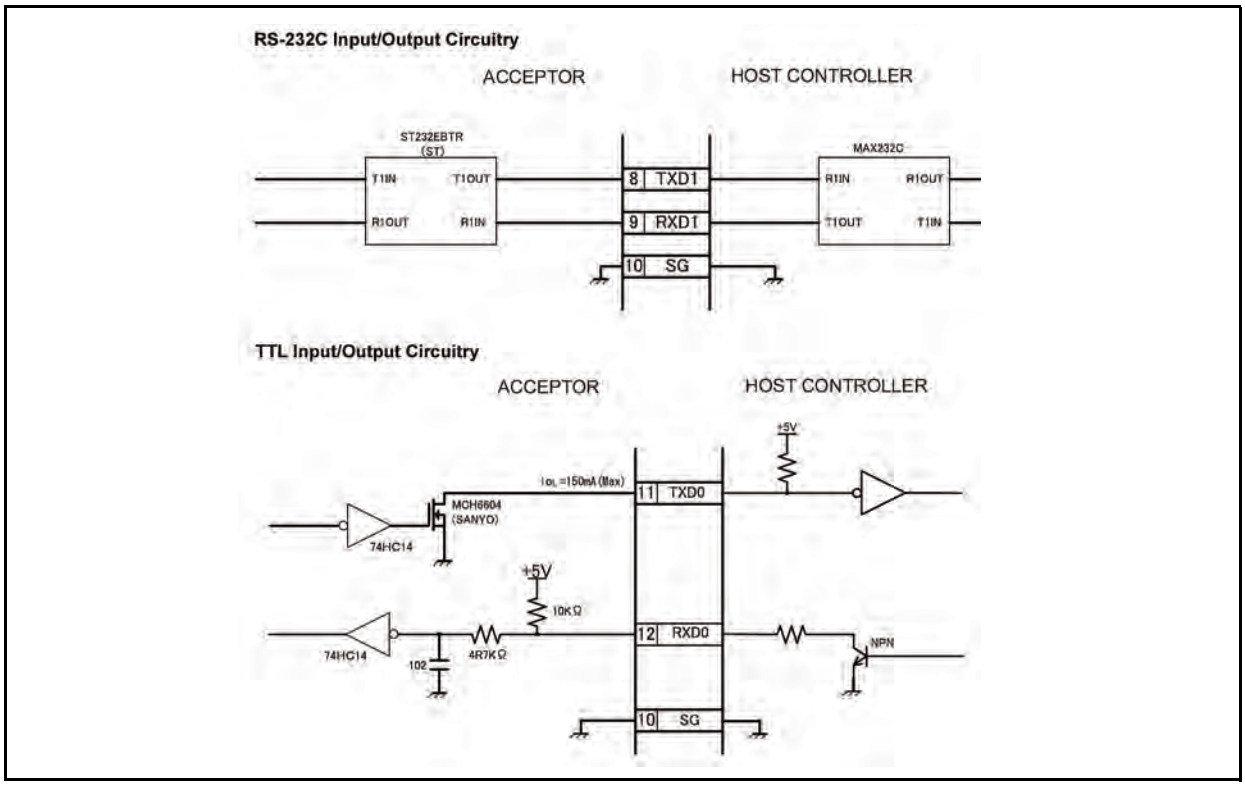

Figure 2-21 Bill Validator-to-Controller RS232 & TTL I/O Circuit and Pin Assignment Schematics

Interface Connector Pin Assignments

DBV-300 ID-003 (RS-232) ID-0C3 Serial Interface Connector Pin Assignments

The following connection information is provided for setting up a **DBV-300** Bill Validator to communicate by **SERIAL** interface. Communications Protocols supported include both **ID-003 (RS-232)** and **ID-0C3**.

Figure 2-22 illustrates the ID-003 & ID-0C3 Serial Interface part number and pin numbering information for the 18-pin communications interface connector located on the left side of the DBV-300 Bill Validator with Table 2-1 listing the associated connection pin, signal name, and function of each pin.

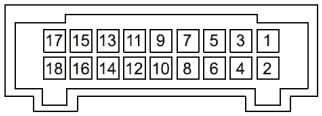

Header (Dual Light Angle Type): 70229-3007 (US MOLEX)
Recommended Housing: 70066-0113 (US MOLEX)
Clip (Dual Type): 70013-0018 (US MOLEX)
Terminal: 70058-0204 (US MOLEX)
Recommended Wire: String AWG #24 to 26

Figure 2-22 DBV-300 ID-003/ID-0C3 Communication Interface Connector Pin Assignment Diagram

Table 2-1 DBV-300 ID-003/ID-0C3 Serial Interface Connector Pin Designations

Pin No.	Signal Name I/O	I/O*	Signal Description
1	NC		Not Connected
2	NC		Not Connected
3	$V_{DD}1$		+12V DC Power†
4	$V_{SS}1$		(12 V DC) Ground†
5	TXD2	OUT	Photo Coupler: Output signal line from Bill Validator‡
6	RXD2	IN	Photo Coupler: Input signal line to Bill Validator‡
7	SG2		Photo Coupler: Signal ground
8	TXD1	OUT	RS 232-C: Output signal line from Bill Validator (Serial)‡
9	RXD1	IN	RS 232-C: Input signal line to Bill Validator (Serial)‡
10	SG		RS-232C / TTL Signal Ground (Serial)
11	TXD0	OUT	TTL: Output signal line from Bill Validator‡
12	RXD0	IN	TTL: Input signal line to Bill Validator‡
13	NC		Not Connected
14	NC		Not Connected
15	NC		Not Connected
16	NC		Not Connected
17	NC		Not Connected
18	NC		Not Connected

* I/O (In/Out) viewed from the Bill Validator side.

† To avoid electrical hazards and equipment damage, be sure to use only the specified voltage.

‡ The serial I/F level (Photo-coupler/RS-232C/TTL) can be selected with DIP Switch No. 2. For details, refer to “DIP Switch Settings” on page 2-14 or the applicable Software Information Data Sheet.

DBV-301 ID-003 (RS-232) ID-0C3 Serial Interface Connector Pin Assignments

The following connection information is provided for setting up a **DBV-301** Bill Validator to communicate by **SERIAL** interface. Communications Protocols supported include both **ID-003 (RS-232)** and **ID-0C3**.

Figure 2-23 illustrates the ID-003 & ID-0C3 Serial Interface part number and pin numbering information for the 18-pin communications interface connector located on the left side of the DBV-301 Bill Validator with Table 2-2 listing the associated connection pin, signal name, and function of each pin.

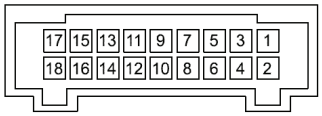

Header (Dual Light Angle Type): 70229-3007 (US MOLEX)
Recommended Housing: 70066-0113 (US MOLEX)
Clip (Dual Type): 70013-0018 (US MOLEX)
Terminal: 70058-0204 (US MOLEX)
Recommended Wire: String AWG# 24 to 26

Figure 2-23 DBV-301 ID-003/ID-0C3 Communication Interface Connector Pin Assignment Diagram

Table 2-2 DBV-301 ID-003/ID-0C3 Serial Interface Connector Pin Designations

Pin No.	Signal Name I/O	I/O*	Typical Signal Description
1	$V_{DD}1$		+24V DC Power†
2	$V_{SS}1$		(24V DC) Ground†
3	NC		Not Connected
4	NC		Not Connected
5	TXD2	OUT	Photo Coupler: Output signal line from Bill Validator‡
6	RXD2	IN	Photo Coupler: Input signal line to Bill Validator‡
7	SG2		Photo Coupler: Signal ground
8	TXD1	OUT	RS 232-C: Output signal line from Bill Validator (Serial)‡
9	RXD1	IN	RS 232-C: Input signal line to Bill Validator (Serial)‡
10	SG		RS-232C / TTL Signal Ground (Serial)
11	TXD0	OUT	TTL: Output signal line from Bill Validator‡
12	RXD0	IN	TTL: Input signal line to Bill Validator‡
13	NC		Not Connected
14	NC		Not Connected
15	NC		Not Connected
16	NC		Not Connected
17	NC		Not Connected
18	NC		Not Connected

* I/O (In/Out) viewed from the Bill Validator side.

† To avoid electrical hazards and equipment damage, be sure to use only the specified voltage.

‡ The serial I/F level (Photo-coupler/RS-232C/TTL) can be selected with DIP Switch No. 2. For details, refer to “DIP Switch Settings” on page 2-14 or the applicable Software Information Data Sheet.

DBV-302 ID-003 (RS-232) ID-0C3 Serial Interface Connector Pin Assignments

The following connection information is provided for setting up a **DBV-302** Bill Validator to communicate by **SERIAL** interface. Communications Protocols supported include both **ID-003 (RS-232)** and **ID-0C3**.

Figure 2-24 illustrates the ID-003 & ID-0C3 Serial Interface part number and pin numbering information for the 18-pin communications interface connector located on the left side of the DBV-302 Bill Validator with Table 2-3 listing the associated connection pin, signal name, and function of each pin.

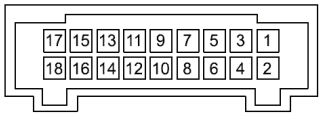

Header (Dual Light Angle Type): 70229-3007 (US MOLEX)
Recommended Housing: 70066-0113 (US MOLEX)
Clip (Dual Type): 70013-0018 (US MOLEX)
Terminal: 70058-0204 (US MOLEX)
Recommended Wire: String AWG# 24 to 26

Figure 2-24 DBV-302 ID-003/ID-0C3 Communication Interface Connector Pin Assignment Diagram

Table 2-3 DBV-302 ID-003/ID-0C3 Serial Interface Connector Pin Designations

Pin No.	Signal Name I/O	I/O*	Typical Signal Description
1	NC		Not Connected
2	NC		Not Connected
3	NC		Not Connected
4	NC		Not Connected
5	TXD2	OUT	Photo Coupler: Output signal line from Bill Validator†
6	RXD2	IN	Photo Coupler: Input signal line from Bill Validator†
7	SG2		Photo Coupler: Signal ground
8	TXD1	OUT	RS 232-C: Output signal line from Bill Validator (Serial)‡
9	RXD1	IN	RS 232-C: Input signal line to Bill Validator (Serial)‡
10	SG		RS-232C / TTL Signal Ground (Serial)
11	TXD0	OUT	TTL: Output signal line from Bill Validator‡
12	RXD0	IN	TTL: Input signal line to Bill Validator‡
13	NC		Not Connected
14	NC		Not Connected
15	NC		Not Connected
16	NC		Not Connected
17	NC		Not Connected
18	NC		Not Connected

* I/O (In/Out) viewed from the Bill Validator side.

† To avoid electrical hazards and equipment damage, be sure to use only the specified voltage.

‡ The serial I/F level (Photo-coupler/RS-232C/TTL) can be selected with DIP Switch No. 2. For details, refer to “DIP Switch Settings” on page 2-14 or the applicable Software Information Data Sheet.

DBV-300 ID-002, ID-042 & ID-044 Pulse Interface Connector Pin Assignments

The following connection information is provided for setting up a **DBV-300** Bill Validator to communicate by **PULSE** interface. Communications Protocols supported include the **ID-002, ID-042** and **ID-044**.

Figure 2-25 illustrates the ID-002, ID-042 & ID-044 Pulse Interface part number and pin numbering information for the 18-pin communications interface connector located on the left side of the DBV-300 Bill Validator with Table 2-4 listing the associated connection pin, signal name, and function of each pin.

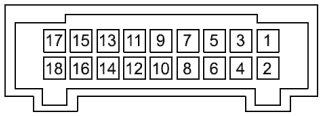

Header (Dual Light Angle Type): 70229-3007 (US MOLEX)
Recommended Housing: 70066-0113 (US MOLEX)
Clip (Dual Type): 70013-0018 (US MOLEX)
Terminal: 70058-0204 (US MOLEX)
Recommended Wire: String AWG# 24 to 26

Figure 2-25 DBV-300 ID-002/ID-042/ID-044 Communication Interface Connector Pin Assignment

Table 2-4 DBV-300 ID-002/ID-042/ID-044 Pulse Interface Connector Pin Designations

Pin No.	Signal Name I/O	I/O*	Signal Description
1	NC		Not Connected
2	NC		Not Connected
3	$V_{DD}1$		+12V DC Power†
4	$V_{SS}1$		(12V DC) Ground†
5	NC		Not Connected
6	NC		Not Connected
7	NC		Not Connected
8	NC		Not Connected
9	NC		Not Connected
10	SG		Signal Ground
11	/VEND	OUT	Accepted Denomination Signal‡
12	NC		Not Connected
13	NC		Not Connected
14	/ENABLE	IN	Bill inhibited (Hi) / Accepted (Low) Signal‡
15	NC		Not Connected
16	/BUSY	OUT	Acceptor Operating Signal‡
17	/ABN	OUT	Acceptor Error Signal‡
18	/FULL	OUT	Cash Box Full Signal‡

* I/O (In/Out) viewed from the Bill Validator side.

† To avoid electrical hazards and equipment damage, be sure to use only the specified voltage.

‡ These signals are considered Active Lo.

DBV-301 ID-002, ID-042 & ID-044 Pulse Interface Connector Pin Assignments

The following connection information is provided for setting up a **DBV-301** Bill Validator to communicate by **PULSE** interface. Communications Protocols supported include the **ID-002, ID-042** and **ID-044**.

Figure 2-26 illustrates the ID-002, ID-042 & ID-044 Pulse Interface part number and pin numbering information for the 18-pin communications interface connector located on the left side of the DBV-301 Bill Validator with Table 2-5 listing the associated connection pin, signal name, and function of each pin.

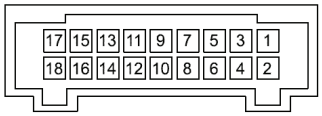

Header (Dual Light Angle Type): 70229-3007 (US MOLEX)
Recommended Housing: 70066-0113 (US MOLEX)
Clip (Dual Type): 70013-0018 (US MOLEX)
Terminal: 70058-0204 (US MOLEX)
Recommended Wire: String AWG# 24 to 26

Figure 2-26 DBV-301 ID-002/ID-042/ID-044 Communication Interface Connector Pin Assignment

Table 2-5 DBV-301 ID-002/ID-042/ID-044 Pulse Interface Connector Pin Designations

Pin No.	Signal Name I/O	I/O*	Signal Description
1	$V_{DD}1$		+24V DC Power†
2	$V_{SS}1$		(24V DC) Ground†
3	NC		Not Connected
4	NC		Not Connected
5	NC		Not Connected
6	NC		Not Connected
7	NC		Not Connected
8	NC		Not Connected
9	NC		Not Connected
10	SG		Signal Ground
11	/VEND	OUT	Accepted Denomination Signal‡
12	NC		Not Connected
13	NC		Not Connected
14	/ENABLE	IN	Bill inhibited (Hi) / Accepted (Low) Signal‡
15	NC		Not Connected
16	/BUSY	OUT	Acceptor Operating Signal‡
17	/ABN	OUT	Acceptor Error Signal‡
18	/FULL	OUT	Cash Box Full Signal‡

* I/O (In/Out) viewed from the Bill Validator side.

† To avoid electrical hazards and equipment damage, be sure to use only the specified voltage.

‡ These signals are considered Active Lo.

DBV-302 ID-002, ID-042 & ID-044 Pulse Interface Connector Pin Assignments

The following connection information is provided for setting up a **DBV-301** Bill Validator to communicate by **PULSE** interface. Communications Protocols supported include the **ID-002, ID-044** and **ID-044**.

Figure 2-27 illustrates the ID-002, ID-042 & ID-044 Pulse Interface part number and pin numbering information for the 18-pin communications interface connector located on the left side of the DBV-302 Bill Validator with Table 2-6 listing the associated connection pin, signal name, and function of each pin.

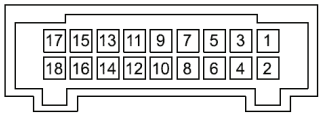

Header (Dual Light Angle Type): 70229-3007 (US MOLEX)
Recommended Housing: 70066-0113 (US MOLEX)
Clip (Dual Type): 70013-0018 (US MOLEX)
Terminal: 70058-0204 (US MOLEX)
Recommended Wire: String AWG#24 to 26

Figure 2-27 DBV-302 ID-002/ID-042/ID-044 Communication Interface Connector Pin Assignment

Table 2-6 DBV-302 ID-002/ID-042/ID-044 Pulse Interface Connector Pin Designations

Pin No.	Signal Name I/O	I/O*	Signal Description
1	NC		Not Connected
2	NC		Not Connected
3	NC		Not Connected
4	NC		Not Connected
5	NC		Not Connected
6	NC		Not Connected
7	NC		Not Connected
8	NC		Not Connected
9	NC		Not Connected
10	SG		Signal Ground
11	/VEND	OUT	Accepted Denomination Signal†
12	NC		Not Connected
13	NC		Not Connected
14	/ENABLE	IN	Bill inhibited (Hi) / Accepted (Low) Signal†
15	NC		Not Connected
16	/BUSY	OUT	Acceptor Operating Signal†
17	/ABN	OUT	Acceptor Error Signal†
18	/FULL	OUT	Cash Box Full Signal†

* I/O (In/Out) viewed from the Bill Validator side.

† These signals are considered Active Lo.

DBV-301 ID-0D3 MDB Vending Machine Interface Connector Pin Assignments

The following connection information is provided for setting up a **DBV-301** Bill Validator to communicate by **MDB** interface for **vending applications**. Communications Protocols supported is **ID-0D3**.

Figure 2-28 illustrates the ID-0D3 MDB Interface part number and pin numbering information for the 18-pin communications interface connector located on the left side of the DBV-301 Bill Validator with Table 2-7 listing the associated connection pin, signal name, and function of each pin.

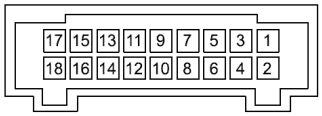

Header (Dual Light Angle Type): 70229-3007 (US MOLEX)
Recommended Housing: 70066-0113 (US MOLEX)
Clip (Dual Type): 70013-0018 (US MOLEX)
Terminal: 70058-0204 (US MOLEX)
Recommended Wire: String AWG# 24 to 26

Figure 2-28 DBV-301 ID-0D3 MDB Communication Interface Connector Pin Assignment Diagram

Table 2-7 DBV-301 ID-0D3 MDB Interface Connector Pin Designations

Pin No.	Signal Name I/O	I/O*	Signal Description
1	$V_{DD}1$		+24V DC Power†
2	$V_{SS}1$		(24V DC) Ground†
3	NC		Not Connected
4	NC		Not Connected
5	TXD2	OUT	Photo Coupler: Output signal line from Bill Validator‡
6	RXD2	IN	Photo Coupler: Input signal line from Bill Validator†
7	SG2		Photo Coupler: Signal ground
8	NC		Not Connected
9	NC		Not Connected
10	NC		Not Connected
11	NC		Not Connected
12	NC		Not Connected
13	NC		Not Connected
14	NC		Not Connected
15	NC		Not Connected
16	NC		Not Connected
17	NC		Not Connected
18	NC		Not Connected

* I/O (In/Out) viewed from the Bill Validator side.

† To avoid electrical hazards and equipment damage, be sure to use only the specified voltage.

‡ MDB connections to a Vending Machine Controller (VMC) are made via a six (6) pin Female Molex. Connector.

Connector Types

Figure 2-29 illustrates a typical interconnect plug pin configuration.

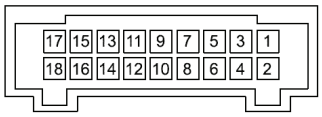

- Right Angle Dual Header
  53107-1820 (MOLEX)
  Polyester (w/glass inclusion)
- Header Housing (recommended)
  51030-0920 (MOLEX)
  Polyester (w/glass inclusion)
- Dual Clip
  51041-1800 (MOLEX)
  Polyester (w/glass inclusion)
- Terminal
  50083-8114 (MOLEX)
  Wire Gauge AWG#24 ~ 26
- Separate Wire (recommended)
  UL1007 AWG#24 ~ 26

Figure 2-29 Typical Interconnect Plug Pin Assignment Diagram

DIP Switch Settings

All DBV-30X unit's contain two (2) DIP Switch Blocks designated DIP Switch 1 (SW1) and DIP Switch 2 (SW2), and are located on the left side of the DBV unit.

Due to firmware load differences, software protocols, and user options, the settings for each DIP Switch may vary and be different for each customer application. Verify the DIP Switch settings prior to installing a DBV-30X as the DIP Switches may not always be easily accessible once the unit has been installed. The DIP Switch charts provided in Figure 2-31 and Figure 2-32 represent settings that are common to many user applications. However, refer to the specific Software Information Sheet for the Firmware Load, change details and differences relating to your system. See Figure 2-30 for the DIP Switch Block and various Switch position locations.

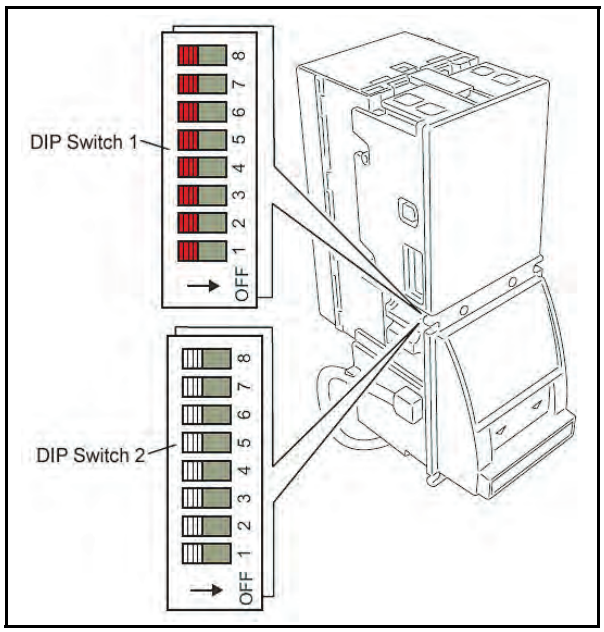

Figure 2-30 DBV-30X DIP Switch Locations

DIP Switch 1 (SW1)

Switches 1 through 7 on DIP Switch #1 are used for accepting or inhibiting bills based on their specific denomination (See Figure 2-31). Refer to the Software Information Sheet for your specific Firmware Load for details on denominations and switch association.

Switch No. 8 on Dip Switch #1 is used to determine the DBV Operating Mode. Switch 8 is set to "OFF" during normal operation. Setting Switch No. 8 to "ON" places the DBV into the Test Mode. Refer to Appendix A of this manual for details on performing Test Mode operations.

No.	Function*	ON	OFF
SW1-1	Denomination 1	Inhibit	Accept
SW1-2	Denomination 2		
SW1-3	Denomination 3		
SW1-4	Denomination 4		
SW1-5	Denomination 5		
SW1-6	Denomination 6		
SW1-7	Denomination 7		
SW1-8	Mode Setting	Test Mode *1	Normal Mode

*** For details concerning using SW1-8 in the Test Mode, refer to "Entering the Test Mode" on page A-8 of Appendix A.**

NOTE: DIP Switch #1 sets the accepted denomination and mode. Depending on the loaded software, denomination settings will differ. Refer to your specific systems software specifications to ensure a correct setting is selected.

Figure 2-31 DIP Switch No. 1 Switch Functions

DIP Switch 2 (SW2)

DIP Switch 2 is used for setting specific communication parameters. The switch functions will vary depending on which software protocol is being used. See Figure 2-32 for associated functions within each protocol type. Review the software specifications that are provided separately for your particular software's DIP Switch settings. Refer to the Software Information Sheet for your specific Firmware Load for further details.

ID-0D3 MDB Interface SW2 Settings

No.	Function	ON	OFF
SW2-1	-	Always OFF-	
SW2-2	-		
SW2-3	-		
SW2-4	-		
SW2-5			
SW2-6			
SW2-7	-		
SW2-8	-		

NOTE: On ID-0D3 (MDB) interfaced units, DIP Switch #2 is used to test the status of DS1. Its switches are all set to OFF in normal operation. Refer to the "DIP Switch Test" on page A-13 of Appendix A of this Service Manual for detailed use of these particular switches.

ID-003 SERIAL Interface SW2 Settings

No.		Function
SW2-1	**SW2-2**	**Serial I/F Level**
OFF	OFF	Photo-Coupler Isolation
ON	OFF	TTL
OFF	ON	RS232C
ON	ON	Not Used
SW2-3	Always OFF	-
SW2-4	Always OFF	-
SW2-5	Always OFF	-
SW2-6	Always OFF	-
SW2-7	Always OFF	-
SW2-8	Always OFF	-

NOTE: On ID-0D3 (Serial) interfaced units, DIP Switch 2 is used to set the Serial Interface Level.

ID-002 PULSE Interface SW2 Settings

No.		Function
SW2-1	**SW2-2**	**Pulse Width**
OFF	OFF	50ms/300ms
ON	OFF	50ms/50ms
OFF	ON	80ms/120ms
ON	ON	150ms/180ms
SW2-3	**SW2-4**	**Pulse Count**
OFF	OFF	1 Pulse
ON	OFF	4 Pulses
OFF	ON	-
ON	ON	-
SW2-5	Always OFF	-
SW2-6	Always OFF	-
SW2-7	Always OFF	-
SW2-8	Always ON	-

NOTE: On ID-002 (Pulse) interfaced units, DIP Switch 2 is used to set the pulse width and count.

ID-042 PULSE Interface SW2 Settings

No.		Function
SW2-1	**SW2-2**	**Pulse Width**
OFF	OFF	50ms/300ms
ON	OFF	50ms/50ms
OFF	ON	80ms/120ms
ON	ON	150ms/180ms
SW2-3	**SW2-4**	**Pulse Count**
OFF	OFF	1 Pulse
ON	OFF	4 Pulses
OFF	ON	10 Pulses
ON	ON	20 Pulses
SW2-5	Always OFF	-
SW2-6	Always OFF	-
SW2-7	Always OFF	-
SW2-8	Always ON	-

NOTE: On ID-042 (Pulse) interfaced units, DIP Switch 2 is used to set the pulse width and count.

ID-044 PULSE Interface SW2 Settings

No.		Function
SW2-1	**SW2-2**	**Pulse Width**
OFF	OFF	50ms/300ms
ON	OFF	50ms/50ms
OFF	ON	80ms/120ms
ON	ON	150ms/180ms
SW2-3	**SW2-4**	**Pulse Count**
OFF	OFF	1 Pulse
ON	OFF	2 Pulses
OFF	ON	3 Pulses
ON	ON	4 Pulses
SW2-5	Always OFF	-
SW2-6	Always OFF	-
SW2-7	Always OFF	-
SW2-8	Always ON	-

NOTE: On ID-044 (Pulse) interfaced units, DIP Switch 2 is used to set the pulse width and count.

Figure 2-32 Various DIP Switch No. 2 Switch Functions

Operational Flowchart

Figure 2-33 depicts a typical bill acceptance flow process.

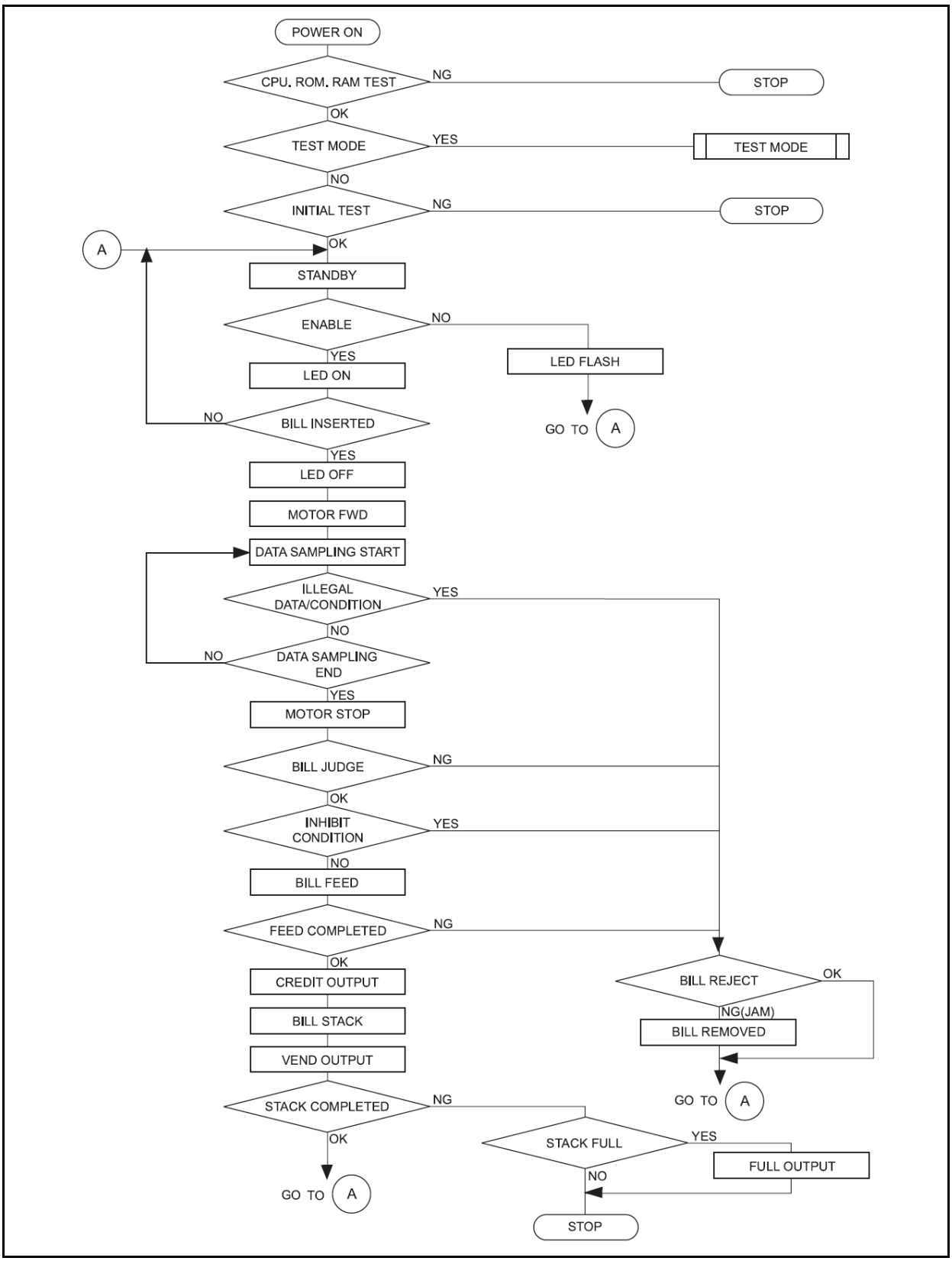

Figure 2-33 Bill Validator Operational Flowchart

Clearing a Bill Jam

When a bill is jammed in the Stacker Section:

1. Remove the Cash Box.
2. Remove the jammed Bankknote following the large Arrow's path shown in Figure 2-34.

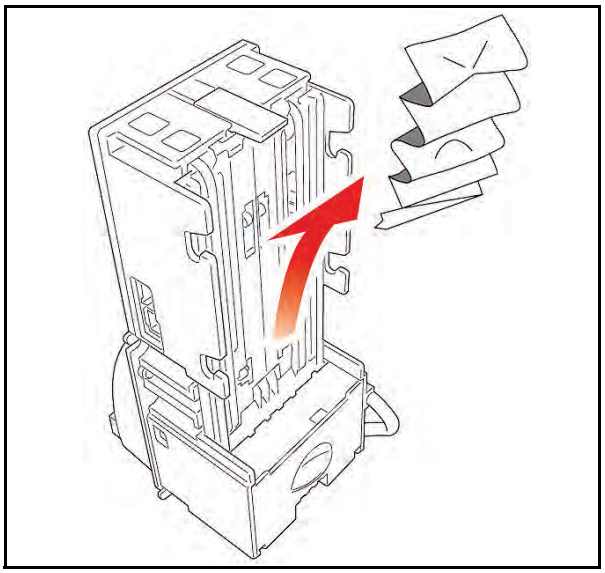

Figure 2-34 Clearing a Jammed Stacker Bill

When a bill is jammed in the Validator Section:

1. Lift the Validator Head Release Lever and pull out the Lower Guide (See Figure 2-35 ①).
2. Remove the jammed Banknote (See Figure 2-35 ②).

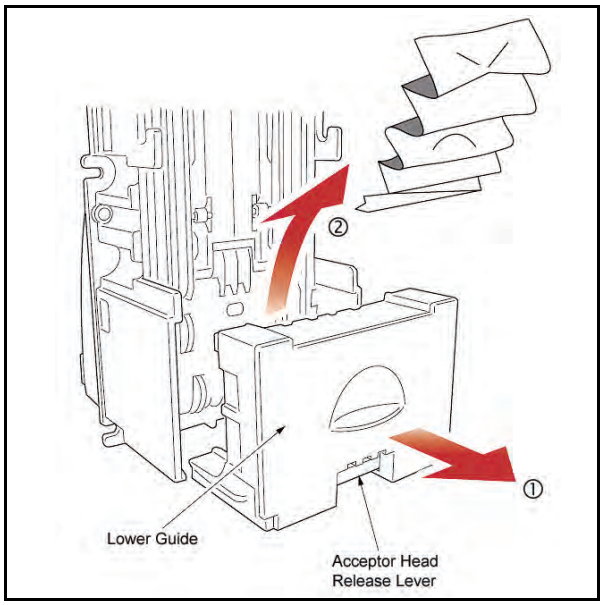

Figure 2-35 Clearing a Jammed Validator

Preventive Maintenance

The DBV-30X Sensor lenses ① are made of a transparent Polymer material; handle them with care. It is important to keep the Banknote path, Rollers ②, and Belts ③ clean (See Figure 2-36, and Figure 2-37 for their specific locations).

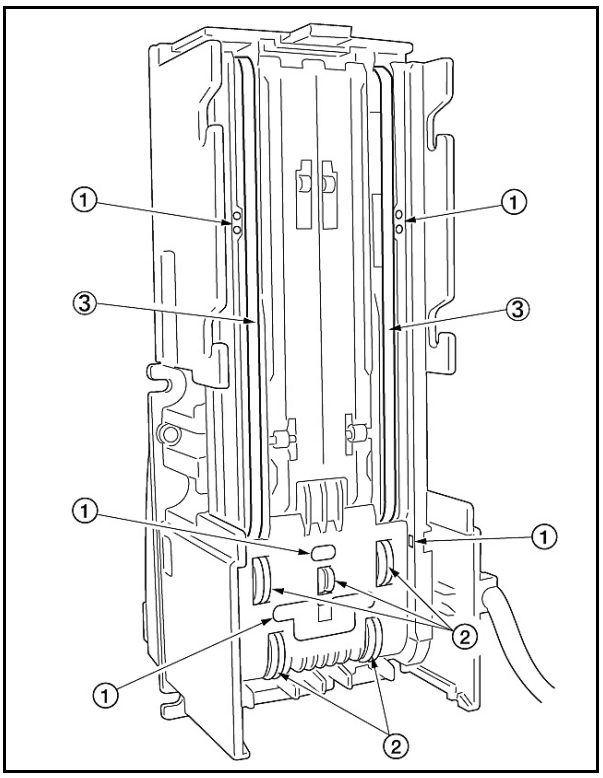

Figure 2-36 Upper Guide Stacker Sensors and Rollers

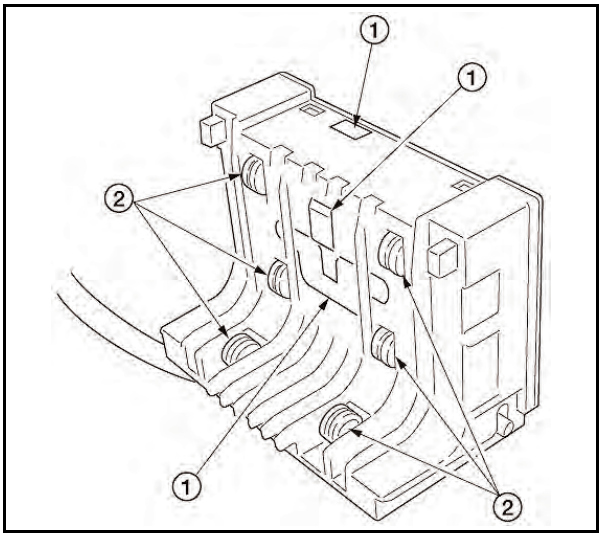

Figure 2-37 Lower Guide Sensors and Rollers

To clean the Lenses, use a lint-free cloth and a mild non-abrasive detergent such as liquid dish soap mixed with water.

Do not use alcohol or thinner for any cleaning.

Note: JCM does not recommend using cleaning pads, or cleaning solutions of any kind.

Cash box Preventive Maintenance (P/M)

Perform periodic P/M on the Cash Boxes to ensure proper operation. The Cash Box Sensor Lenses ① are made of a transparent Polymer material; handle them with care (See Figure 2-38).

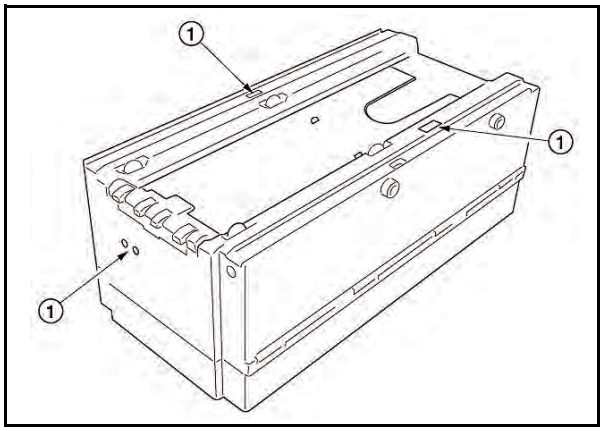

Figure 2-38 Cash Box Sensors

Use compressed air to blow out loose paper fibers and other debris that can build up over time. Check all moving parts for wear and proper positioning. If the unit does not operate properly, it can cause Banknote jams.

Available Cleaning Card

A second generation JCM Waffletechnology Bill Validator Cleaning Card is now available (JAC Part No. 501-100221R)(Manufacturer's Part No. KWJCM-B4B15M). The cleaning card is designed to be used as a supplemental part of a Preventive Maintenance program to help in reducing dirt and paper dust build-up within a Unit. The use of this Cleaning Card will optimize performance between regular Preventive Maintenance intervals.

This is the only Cleaning Card authorized for use on the DBV-30X Series Validator (See Figure 2-39).

Card Features

- A unique Waffletechnology design that hugs all surfaces to insure complete surface cleaning
- Specially designed scrubber patterns insure that Belts and O-ring Rollers are cleaned and lubricated to prevent them from drying out.

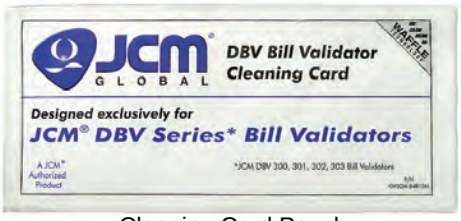

Cleaning Card Pouch

New Cleaning Card

Figure 2-39 JCM Waffletechnology Cleaning Card

Directions For Use

1. Remove Cleaning Card from its Pouch and insert it into the Bill Validator.
2. The Cleaning Card will be accepted and then automatically rejected.
3. Repeat this process several times to ensure debris build-up removal.
4. Insert and HOLD cleaning card while the Validator pulls on it to ensure proper belt cleaning.
5. Dispose of used card in an environmentally safe manner.

For more information and a list of Authorized Waffletechnology Distributors visit: http://www.jcmwaffletechnology.com.

3 MDB PROTOCOL

NOTE: The latest MDB Protocol Specifications may be found at www.Vending.org

NOTE: For ID-044, ID-042 or ID-002 Protocol Specifications, contact your local JCM Sales Representative.

THIS PAGE INTENTIONALLY LEFT BLANK

Optipay® BV
DBV-30X Bill Validator
Section 4

4 DISASSEMBLY/REASSEMBLY

This section provides disassembly instructions for the Optipay® BV DBV-30X Bill Validator. The information within contains the following features:

1. Circuit Board Disassembly
2. Pusher Mechanism Disassembly
3. Upper Guide Disassembly
4. Lower Guide Disassembly

Circuit Board Disassembly

Removing the CPU and Power Supply Boards

1. Push the cash box release lever ① and remove the cash box ② (See Figure 4-1).

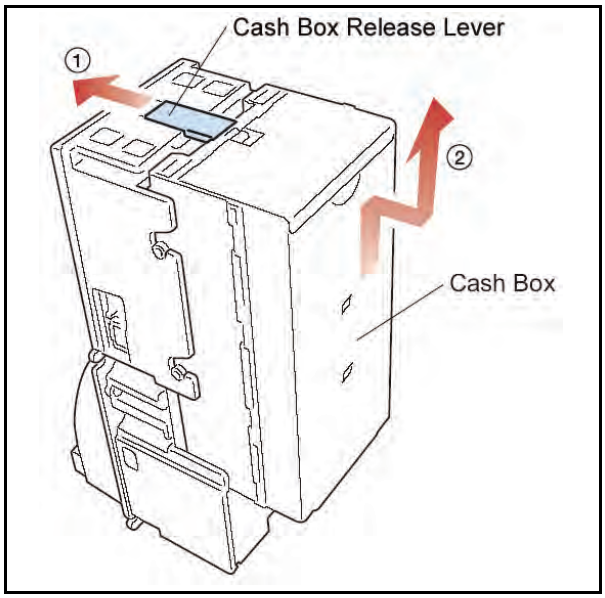

Figure 4-1 Bill Validator Mounting Locations

2. Lift the Validator head release lever and pull out the Lower Guide following the arrows directional path indicated in Figure 4-2.
3. Slide the base cover upward and remove it from the unit (See Figure 4-3).
4. Remove the four (4) Faceplate securing screws and remove the Faceplate (See Figure 4-4 and Figure 4-5).

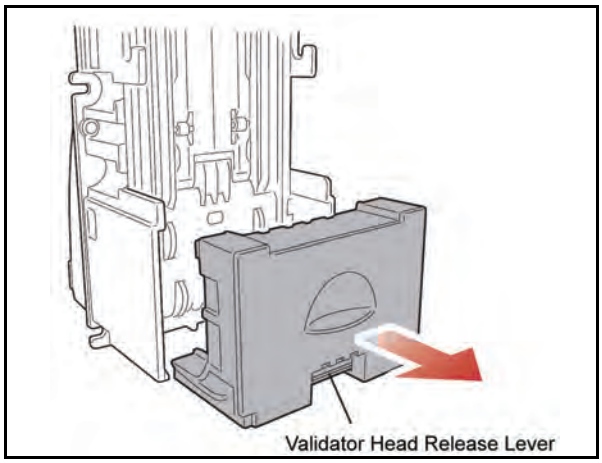

Figure 4-2 Lower Guide Removal

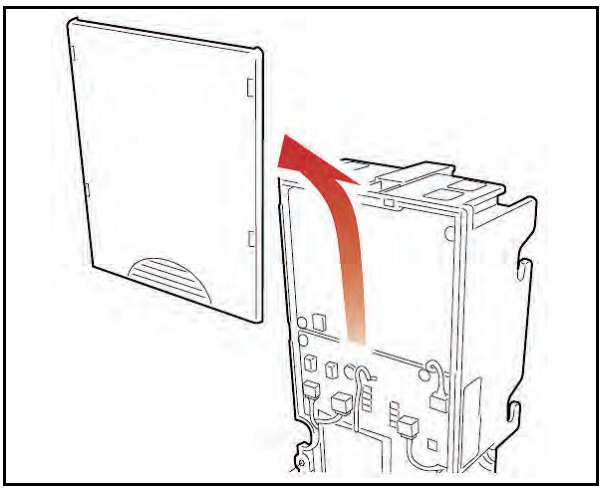

Figure 4-3 Validator Cover Removal

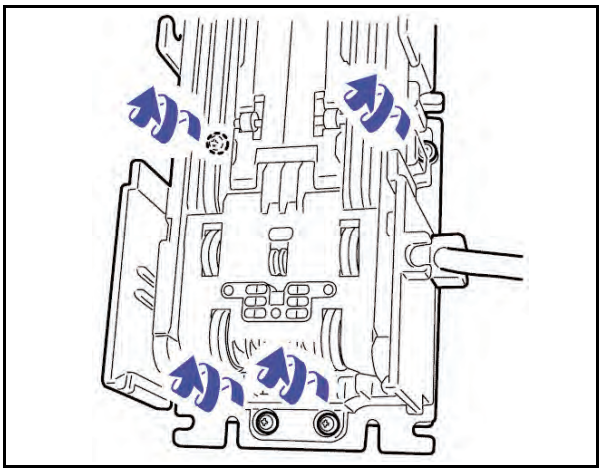

Figure 4-4 Face Plate Rear Mounting View

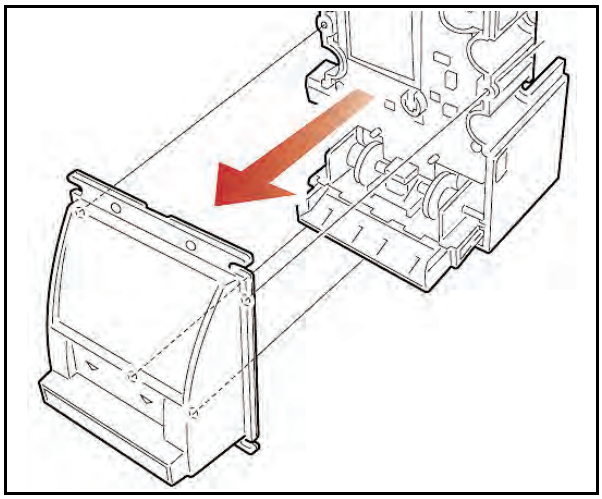

Figure 4-5 Validator Face Plate Removal

5. Lay the assembly on its backside and remove the six (6) screws shown in Figure 4-6. Then disconnect the four plug connectors indicated by the four small arrows in Figure 4-6.

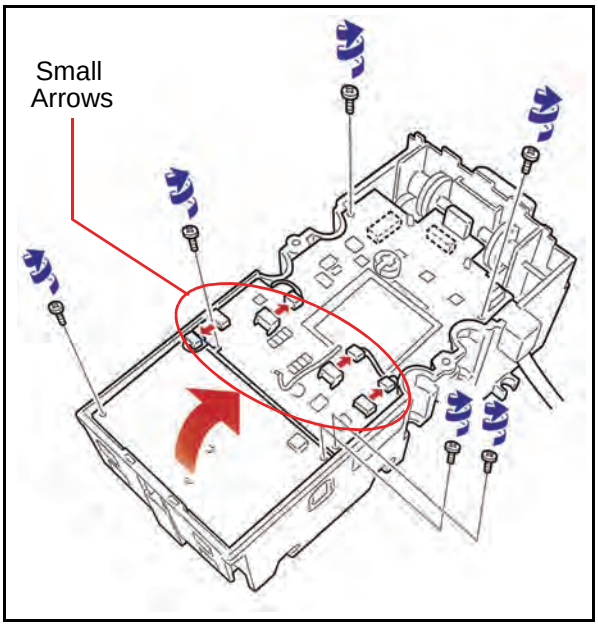

Figure 4-6 Screw and Connector Removal and Circuit Board Access

6. Lift the circuit board assembly up in the direction of the large arrow as indicated in Figure 4-6.
7. Release the ribbon cable connector lock and remove the flexible ribbon cable indicated by the small arrows illustrated in the Figure 4-7 close-up box (See Figure 4-7 a).

NOTE: When disconnecting the flexible connector, be sure to handle it carefully, otherwise, the connector retaining release clip may become damaged.

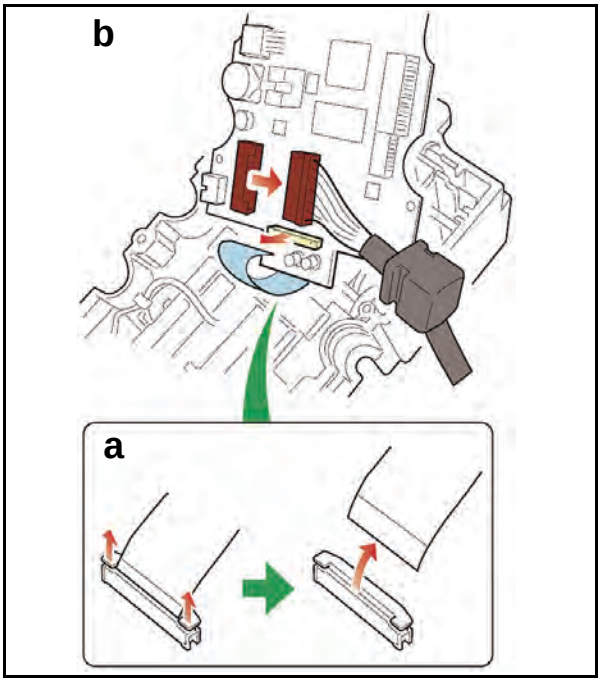

Figure 4-7 CPU Board Connector Removals

8. Disconnect the CPU Board signal cable connector (See large arrow in Figure 4-7 b).
9. Separate the CPU Board and Power Supply Board mating connectors (See Figure 4-8).

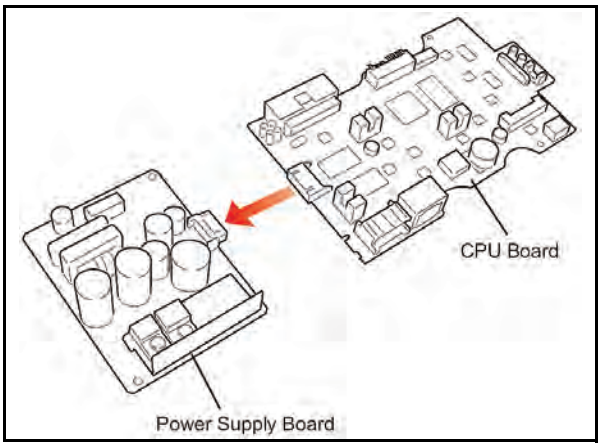

Figure 4-8 CPU and Power Supply Board Connector Separation

Pusher Mechanism Disassembly

Timing Belt Removals

1. Remove the CPU and Power Supply boards as previously described (See “Removing the CPU and Power Supply Boards” on page 4-1).
2. Remove the Side Bill Guides by following the direction indicated by the ① and ② arrows shown in Figure 4-9.

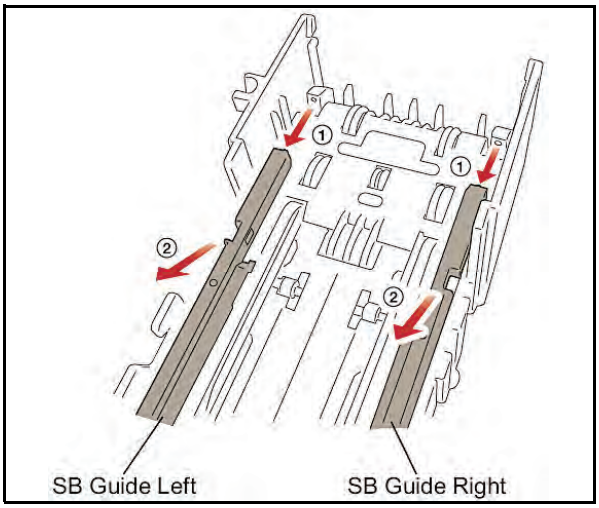

Figure 4-9 Side Guide Removal

3. Remove the Front Bill Guide by extracting it in the direction of the large arrow illustrated in Figure 4-10 ③.

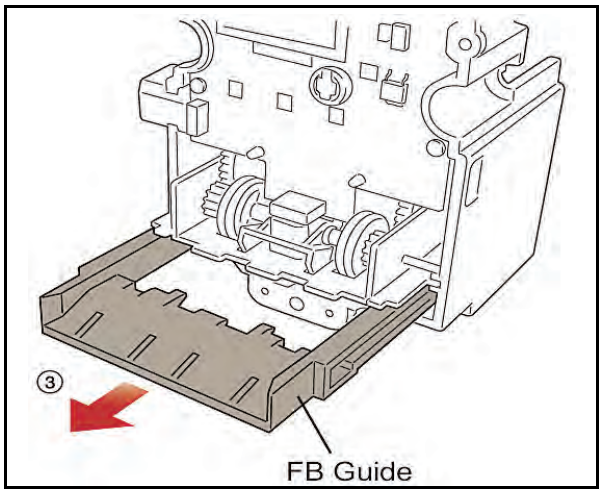

Figure 4-10 Front Guide Removal

4. Remove the Pusher Mechanism retaining screw and remove the assembly by following the large directional arrow shown in Figure 4-11.
5. Remove the two belts from the Pusher Mechanism assembly (See Figure 4-12). Once the belts are removed, remove their related tension rollers on each side as well (See Figure 4-12 a & b).

NOTE: When removing the timing belts from the pusher mechanism, be sure not to loose the rollers once you have removed them.

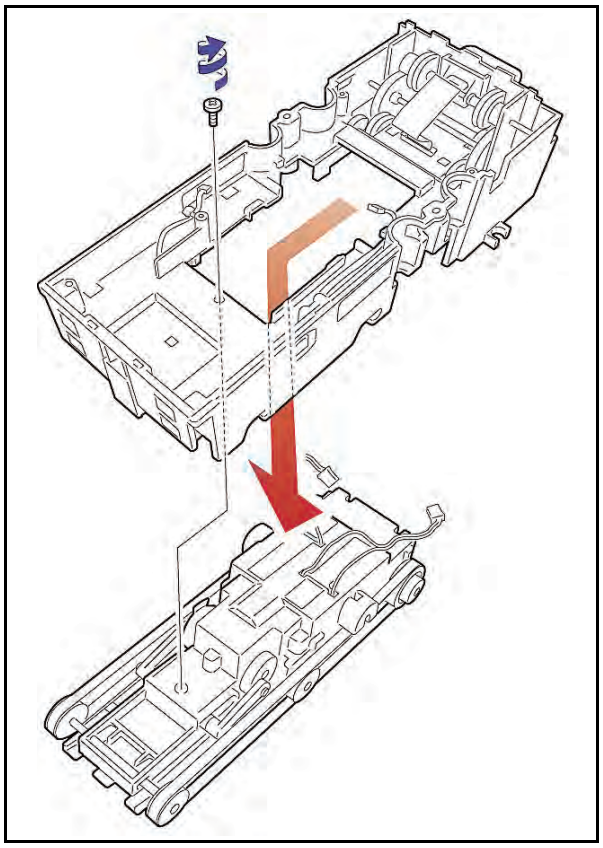

Figure 4-11 Pusher Mechanism Removal

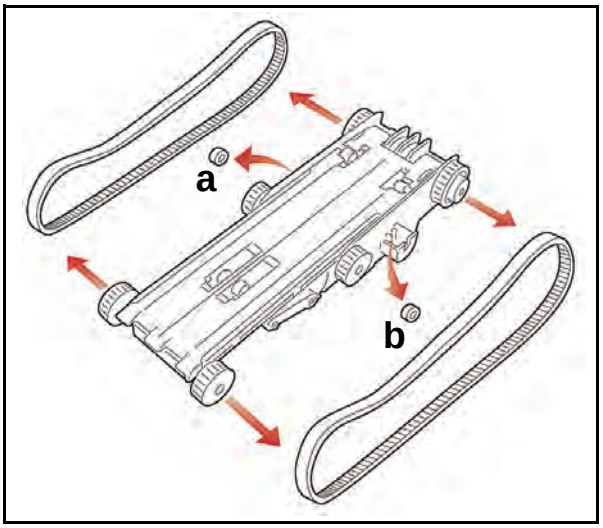

Figure 4-12 Timing Belt Removal

Removing the Drive and Stacking Motors

1. Remove the two shaft retaining C-clip Rings and pull the shaft out of the Pusher Plate (See Figure 4-13).

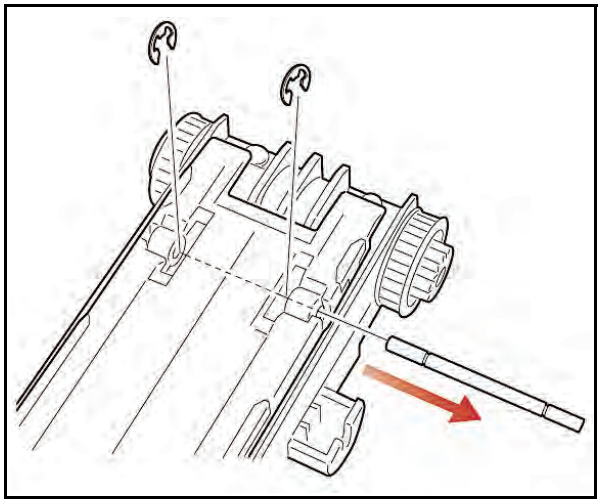

Figure 4-13 Pusher Shaft Removal

2. Slide the Pusher Plate in the direction indicated by the arrow in Figure 4-14 and remove the plate.

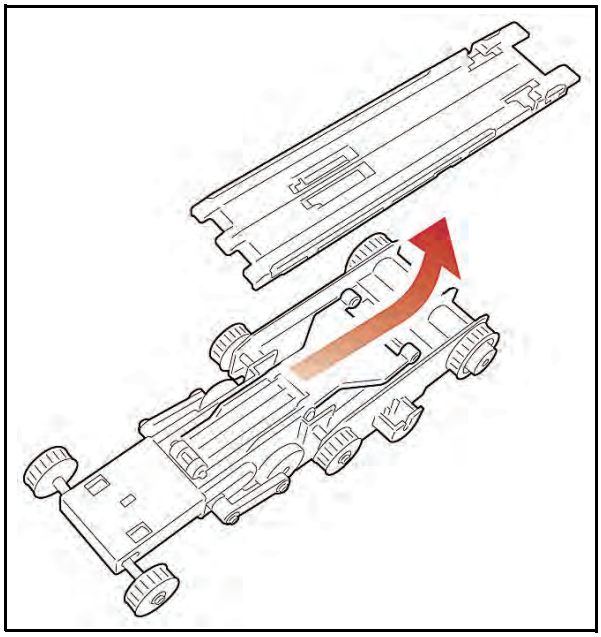

Figure 4-14 Pusher Plate Removal

3. Remove one of the shaft retaining E-clip Rings, and pull the shaft out of the pusher arm; then remove the two sleeve spacers (See Figure 4-15 ① through ③).
4. Lift the Pusher Arm and remove the five (5) retaining screws shown in Figure 4-16 ①, then tip the assembly to the side and remove the loose pin (See Figure 4-16 a ②).
5. Turn the Pusher Mechanism assembly over and remove the Motor guide assembly (See Figure 4-17 ①).

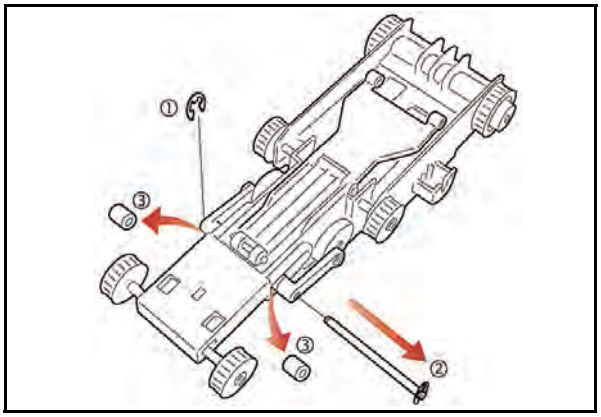

Figure 4-15 Shaft and Sleeve Spacer Removal

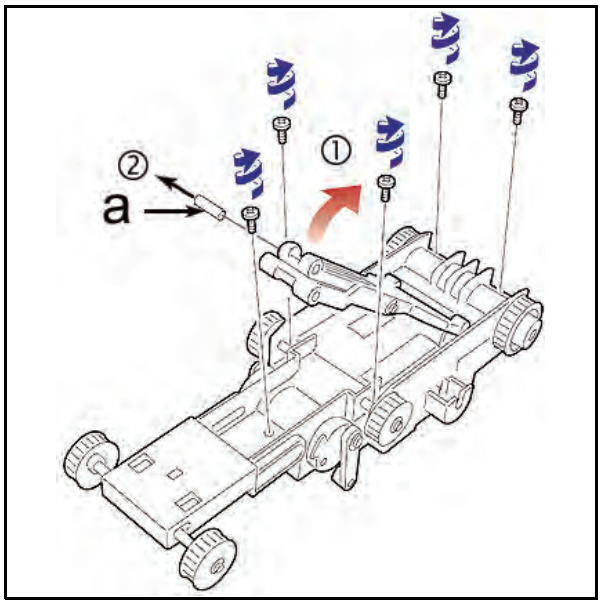

Figure 4-16 Retaining Screw Removals

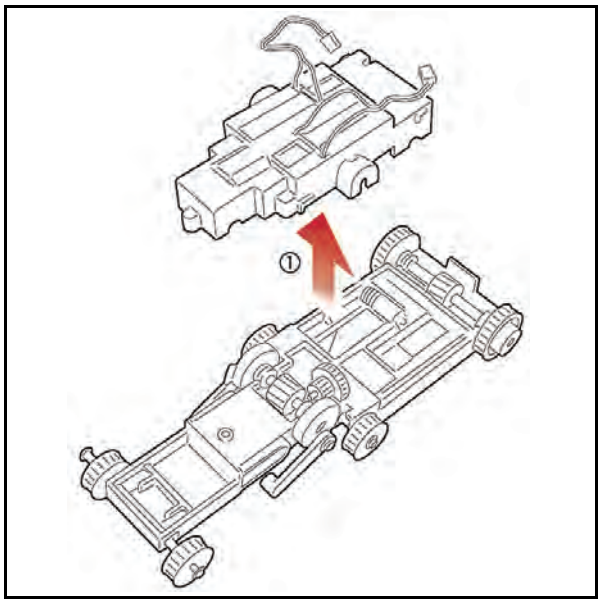

Figure 4-17 Motor Guide Removal

6. Remove the drive and stacking Motors from the Motor guide assembly along with their Encoder Gears (See Figure 4-18 ① and ②).

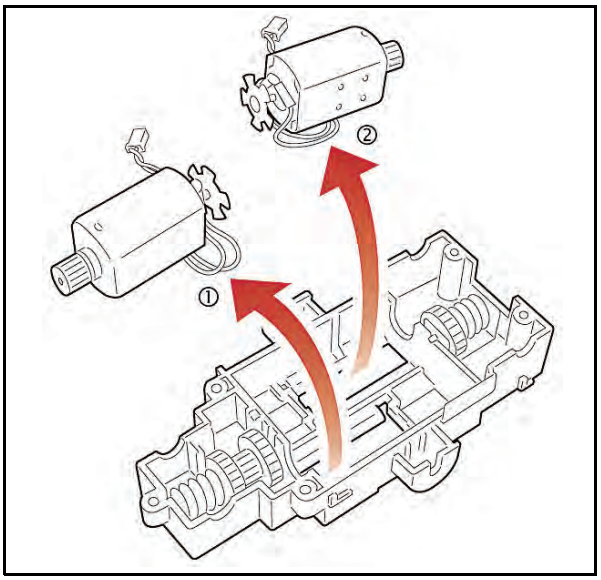

Figure 4-18 Drive and Stack Motor Removal

Upper Guide Disassembly

Sensor Circuit Board Removal

1. Remove the Pusher Mechanism assembly (See “Pusher Mechanism Disassembly” on page 4-2).
2. Remove the two Upper Guide retaining screws and pull the Upper Guide out of the assembly (See Figure 4-19).

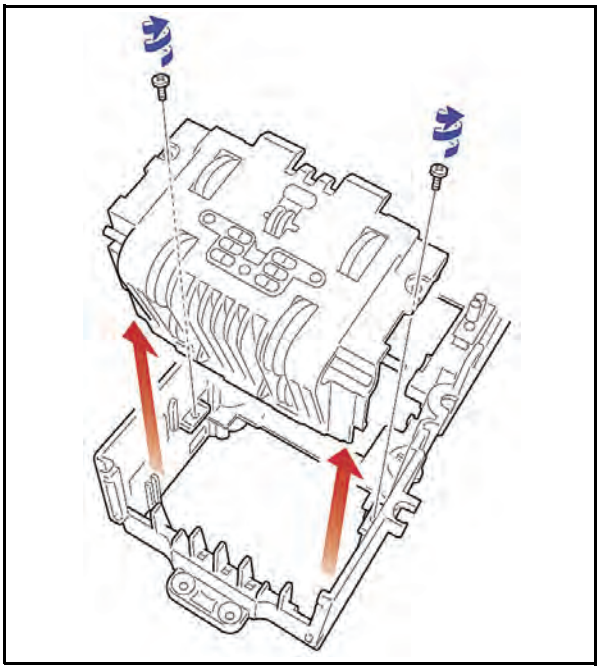

Figure 4-19 Upper Guide Removal

3. Pull the two shafts out and remove the two small and two large gears as illustrated by the arrows in Figure 4-20 ① through ④.

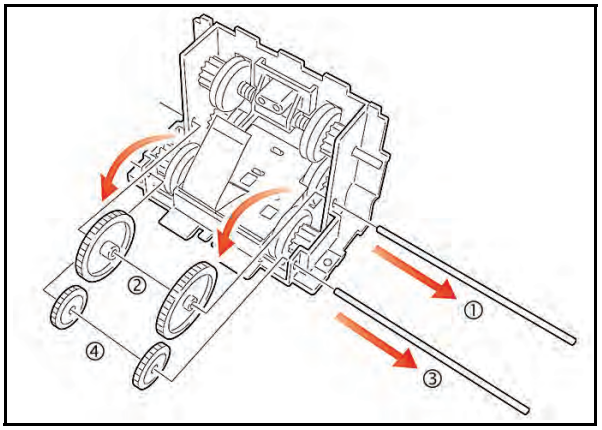

Figure 4-20 Upper Guide Gear Removals

4. Remove the two Sensor board mounting screws and remove the Sensor board from the assembly (See Figure 4-21).

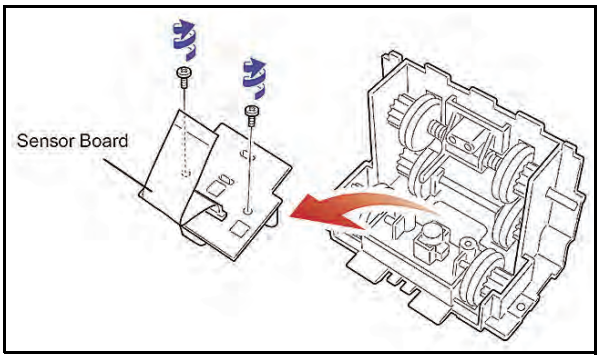

Figure 4-21 Sensor Board Removal

5. Release the Ribbon Cable Connector Lock and remove the flexible ribbon cable from the Sensor board (See Figure 4-22 small arrows).

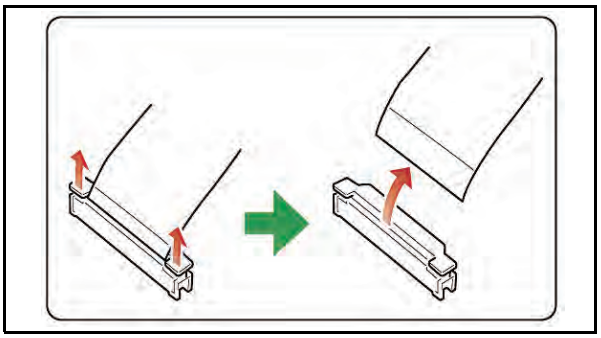

Figure 4-22 Flexible Ribbon Cable Removal

NOTE: When disconnecting the flexible connector, be sure to handle it carefully, otherwise, the connector retaining release clip may become damaged.

O-ring Removal

1. Pull the two (2) short gear shafts out and remove the two (2) drive gears they retained (See Figure 4-23 ① through ④).

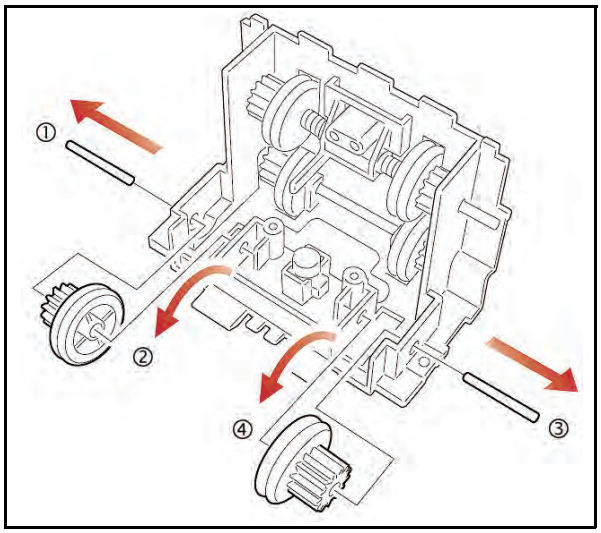

Figure 4-23 Short Shaft and Gear Removal

2. Pull the lower long gear shaft out and remove the two (2) Drive Gears it retained (See Figure 4-24 ① through ③).

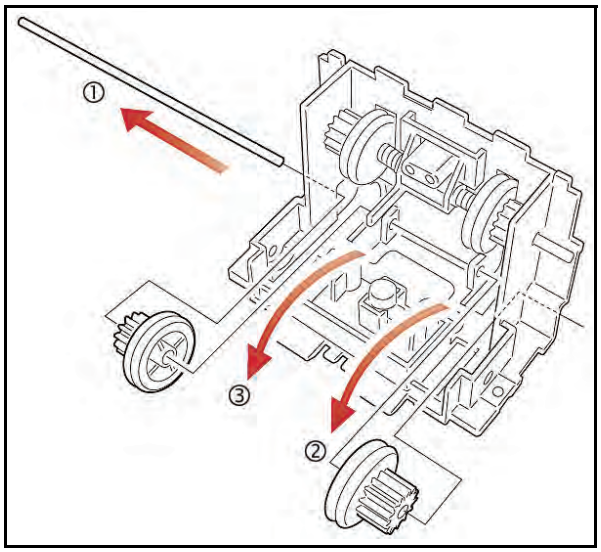

Figure 4-24 Lower Long Shaft and Gear Removal

3. Pull the upper long gear shaft out and remove the two gears, shaft springs, bushings, polly sliders and actuator it supported (See Figure 4-25 ① and ②).
4. Remove the concentric O-rings residing on each of the four drive gears just removed from the upper shaft assembly (See Figure 4-26).

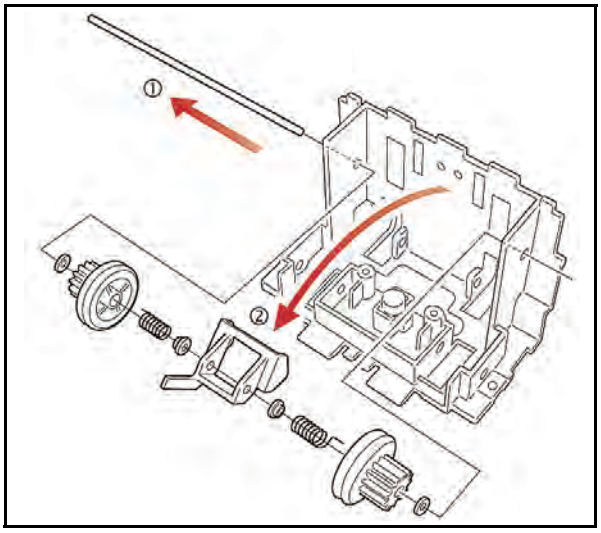

Figure 4-25 Upper Long Shaft and Gear Removal

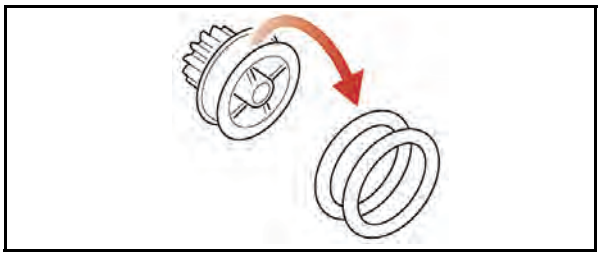

Figure 4-26 O-Ring Removals

Removing the Small Feed Sensor Boards

Proceed as follows to remove the Small Feed Sensor Boards:

1. Remove each Small Feed Sensor Board mounting screw (See Figure 4-27 ① and ②).

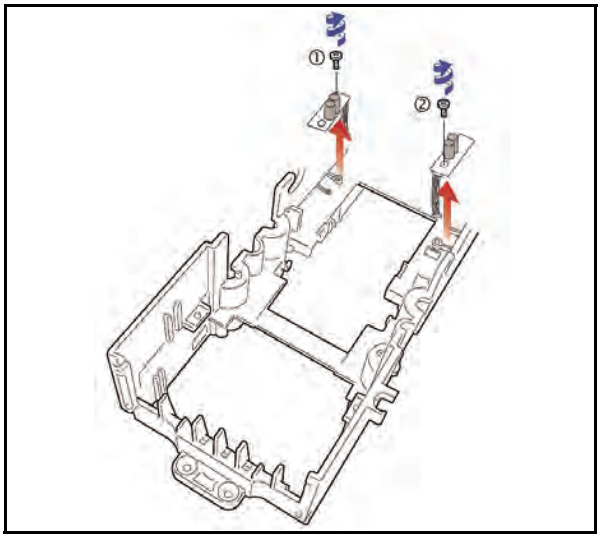

Figure 4-27 Small Feed Sensor Board Removal

2. Remove each Small Feed Sensor Board as indicated by the arrows in Figure 4-27.

Lower Guide Disassembly

MAG Circuit Board Removal

Remove the Lower Bill Guide retaining screw and remove the Lower Bill Guide's Cover in the direction of the large arrow illustrated in Figure 4-28.

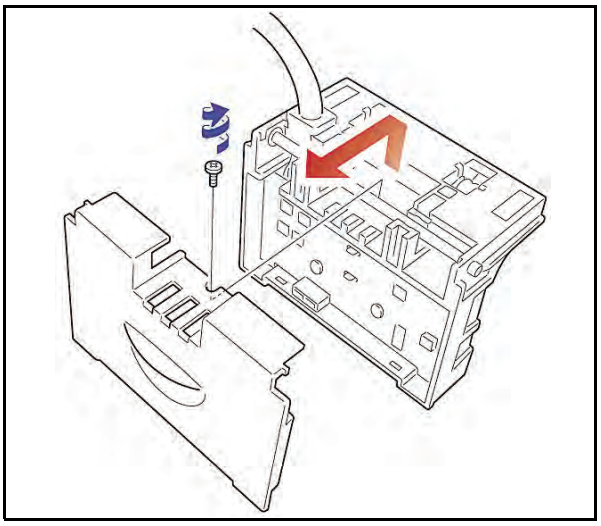

Figure 4-28 Lower Bill Guide Removal

3. Remove the two screws retaining the MAG Board to the assembly and carefully lift the MAG Board up in the direction of the arrow illustrated in Figure 4-29 ① and ②.

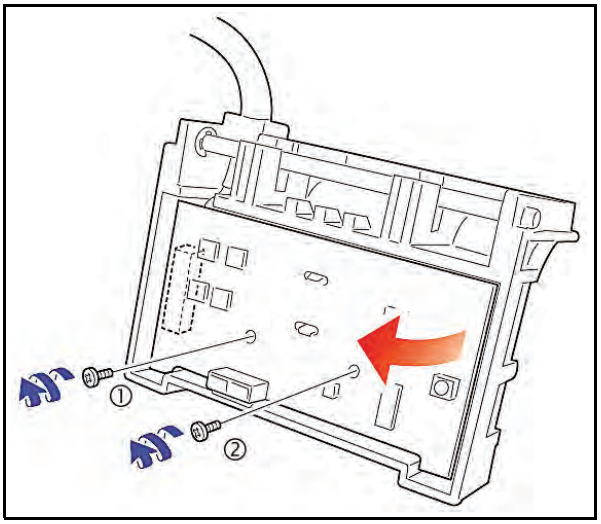

Figure 4-29 MAG Board Removal

4. Disconnect the circuit board's underside connector and remove the MAG Board from the assembly (See Figure 4-30).

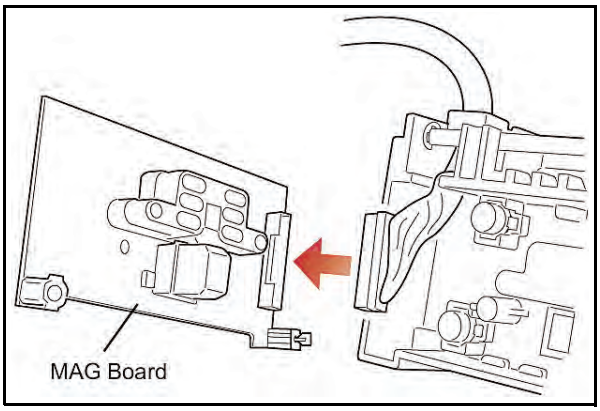

Figure 4-30 Disconnect MAG Board Connector

Reverse all of the proceeding instructions to replace any of the components described during this disassembly process.

THIS PAGE INTENTIONALLY LEFT BLANK

Optipay® BV
DBV-30X Bill Validator
Section 5

5 WIRING DIAGRAMS

This section provides the Wiring Diagram interconnect for the Optipay® BV DBV-30X Bill Validator (See Figure 5-1 and Figure 5-2).

This section contains the following information:

- DBV-30X-SU Interconnect (Part 1)
- DBV-301-SU Interconnect (Part 2 a)
- DBV-302-SU Interconnect (Part 2 b).

DBV-30X Interconnect

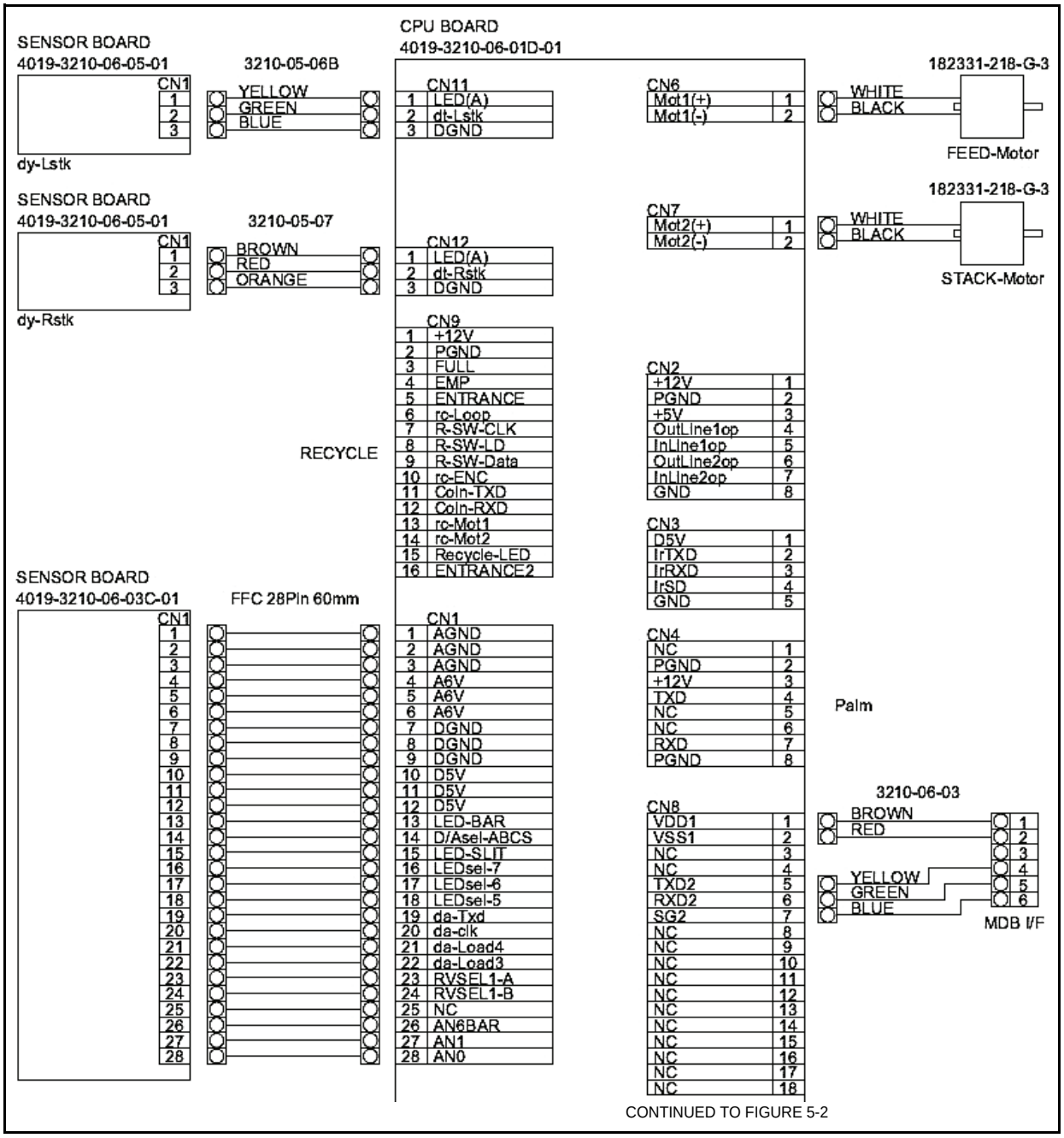

Figure 5-1 DBV-30X Bill Validator Interconnect Wiring Diagram (Part 1a)

DBV-30X Interconnect Continued

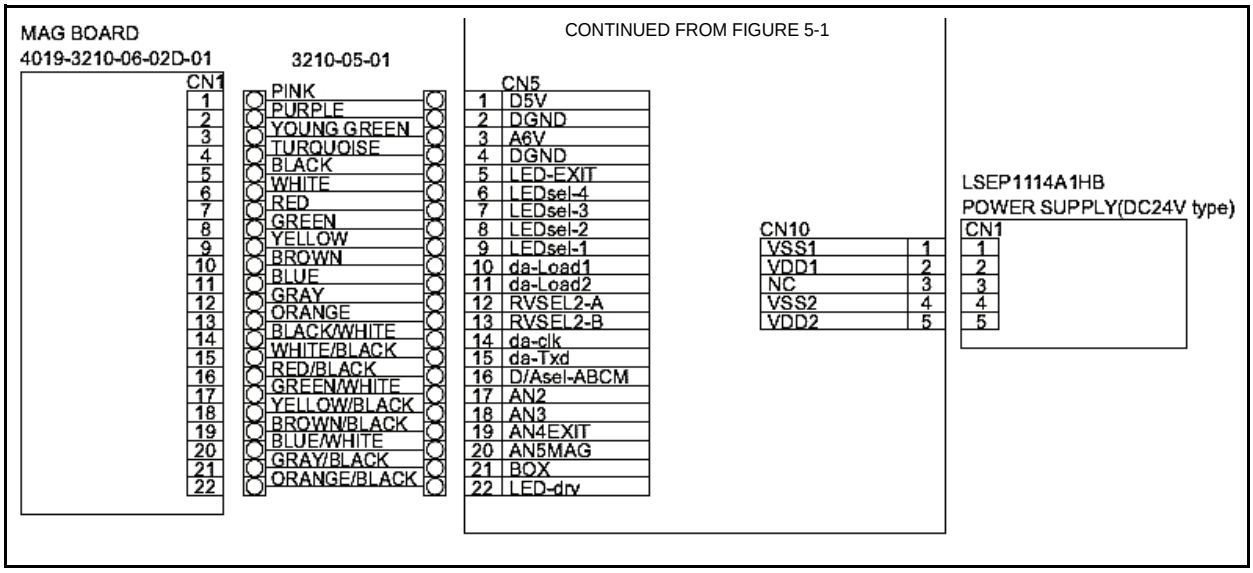

Figure 5-2 DBV-301 Bill Validator Interconnect Wiring Diagram (Part1b)

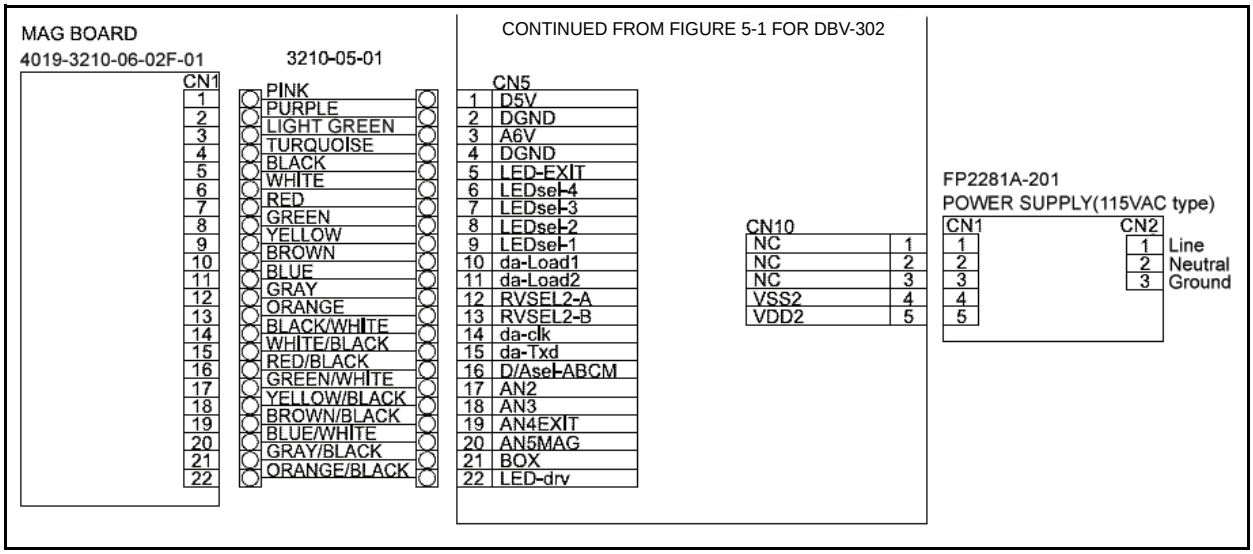

Figure 5-3 DBV-302 Bill Validator Interconnect Wiring Diagram (Part1c)

Optipay® BV
DBV-30X Bill Validator
Section 6

6 PC DOWNLOAD & ADJUSTMENT

This section provides download and adjustment procedure instructions when using a Personal Computer (PC with the Optipay® BV DBV-30X Bill Acceptor. The information within contains the following information:

- Downloading and Flashing Firmware
- Downloading the Program
- Using the Downloaded Program
- Adjustment Preparation
- Adjustment Procedure.

Downloading & Flashing Firmware

This part describes how to setup the equipment, download the applicable Operating Firmware onto a PC, and install (Flash) it into Flash Memory located on the DBV-30X BV CPU Board.

NOTE: This procedure may also be performed using a Palm Pilot® PDA. Refer to the Flash Memory Downloading instructions provided in Section 7 of this Service Manual if using a PDA to program the DBV instead of a PC.

When upgrading the software or replacing the CPU Board this PC software download is required if a Palm Pilot® handheld PDA device containing the JCM PSP-0X Acceptor Program is not available.

Tool Requirements

To download a Firmware file and Flash it to DBV-30X memory, the following items are required:

- DBV-30X Series Bill Acceptor
- PC (Windows® 98 SE/2000/MS-DOS® /XP Version 5.x/6.x with a free RS-232C serial port)
- JCM VM300 or VM301 power module or a suitable power source for powering the DBV.
- A JCM BV Dongle Kit (JAC# 501-000192 RA), a JCM Serial Communications Harness (JAC# 501-000171R), a DBV-30X Download Dongle (JAC# 501-000209RA) or an NRI Palm Dongle Cable 25432 (JAC# 400-100456R) combined with a DB9 F-F Null Modem Adapter (available at any local Electronics Store).
- JCM WBA/DBV-200 Download Application
- Applicable Operating Firmware file for the DBV (e.g., DBV-301 SU (USA2) ID-0D3).

Initial Set-up

Setting up the equipment involves a suitable power source provision for the DBV, establishing a serial connection between the DBV and a PC, and setting the DBV DIP Switches for operation in the 'Download Mode'.

NOTE: If the DBV being programmed is already currently installed in a piece of equipment and has a suitable power source available, then the memory download procedure may be performed as is, provided access to the DIP Switches located on the left side of the DBV and the RJ-45 Port on the right side of the DBV are easily accessible.

Refer to Figure 6-1 as a reference while performing the following steps:

1. Set-up and connect a suitable power source to the DBV that you wish to program. Refer to Table 6-1 a, b or c instructions to properly power the specific DBV desired.

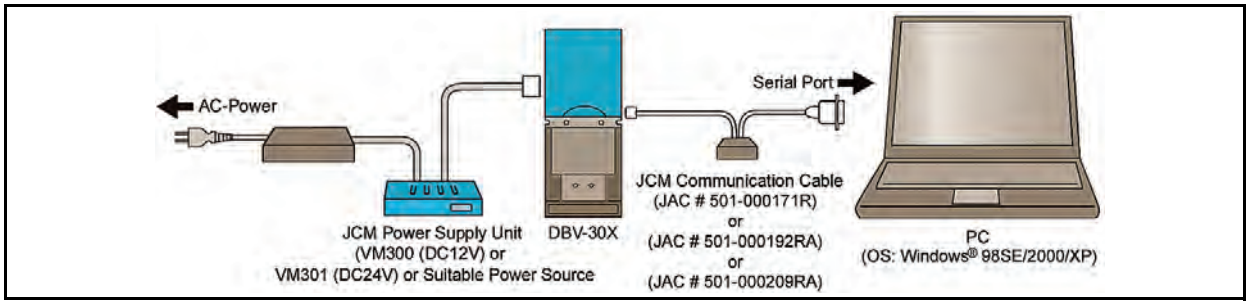

Figure 6-1 PC Software Downloading Configuration

2. Establish a serial connection between the PC and the DBV.

   Use JAC Cable #501-000171R, #501-000192RA, #501-000209RA or #400-100456 to make the connection. If using Cable #400-100456, a DB-9 F-F Null Modem Adapter will also be required.

Caution: When making power connections and connecting a harness to the DBV-30X unit, be sure that power to the VM-300/301 Power Supply is OFF. Failure to do so may cause electric shock and/or permanent damage to the device.

Table 6-1 DBV Powering Instructions

No.	Unit	Power Source
a	DBV-300	If the unit requiring power is a DBV-300, then use a JCM VM300 Power Module. You may also use any power source/ supply capable of providing 12 Volts at 2.5 Amps. Connect the +12 volt supply to Pins 3 (Positive) and 4 (Negative) of the 18-pin Interface Connector located at the middle left side of the DBV.
b	DBV-301	If the unit requiring power is a DBV-301, then use a JCM VM301 Power Module. You may also use any power source/ supply capable of providing 24 Volts at 2.5 Amps. Connect the +24 volt supply to Pins 1 (Positive) and 2 (Negative) of the 18-pin Interface Connector located at the middle left side of the DBV.
c	DBV-302	If the unit requiring power is a DBV-302 then simply connect a nominal 117 VAC power source to the connector harness exiting from the grommet located on the upper left side of the DBV. If the DBV connector harness is terminated in a 9 pin Molex connector, use JCM Power Cord (# 400-100137R) to make the AC Power connection.

3. Connect the DB-9 end of the cable to the PC COM Port.
4. Connect the RJ-45 end of the cable to the RJ-45 Port located on the middle right side of the DBV Unit.
5. In a recessed opening located on the left side of the DBV Unit, set DIP Switches SW1-1, 6, 7 and 8 to "ON" and Switches SW1-2 through 5 to "OFF" (See Figure 6-2).

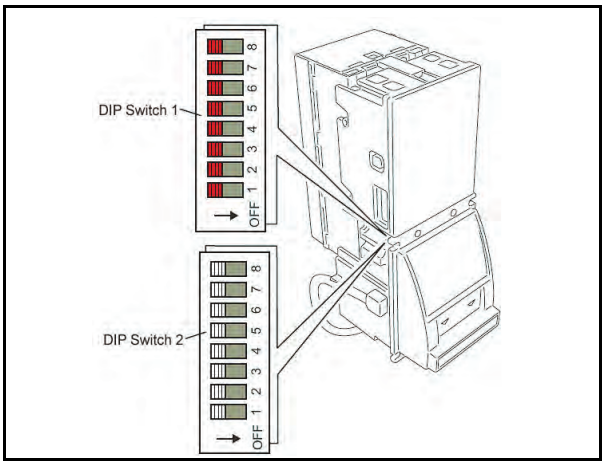

Figure 6-2 DBV DIP Switch Locations

6. Supply the power to the DBV-30X Unit.
7. Check that the Indication LEDs on the front panel Bezel are blinking, and that the Red, Green and Yellow Condition LEDs located on the Lower Sensor Assembly alternately light. This indicates the DBV-30X unit is in the Download Mode.

NOTE: If the DBV was already powered up when Step 1 was performed, then the unit will not currently be in Download Mode, and the LED indications will be different. Simply recycle power to the DBV at this point, and the unit will come back up in the Download Mode with the proper indications as per Step 5.

Downloading the Program

The following steps will begin a JCM Global Website download:

1. Use the PC to access the Internet and visit the JCM American website at: www.jcm-global.com.
2. Download the **'WBA/DBV-200 Download Application'** which can be found on the Website at "**Support/Downloads/Software Tools".**

NOTE: The 'WBA/DBV-200 Download Application' has been placed on the JCM website in a 'zipped' (compressed) file format. Once downloaded, it will need to be 'unzipped' and installed into a suitably named folder on the PC prior to use.

3. Obtain and 'unzip' the **Applicable Operating Firmware** file suitable for the DBV being programmed and place it within a suitably named folder.

NOTE: For Vending applications, the latest MDB based ID-0D3 Firmware Load can be found at: ***http://www.jcmglobal.com/en/support/downloads.aspx*** **/ Application Firmware** *area of the page. Firmware Loads for ID-002 (Pulse), ID-003 (Serial), ID-042 (Pulse & Serial) and ID-044 (Pulse & Serial) Communication Protocols are also available there. Firmware files are provided in a 'zipped' (compressed) file format. Once down-loaded, the file will need to be 'unzipped' and placed into a suitably named Folder on the PC prior to use.*

Using the Download Program

1. Locate the newly created PC folder where the **'WBA/DBV-200 Download Application'** was 'unzipped' and stored. The file name for the 'unzipped' application will be "`JCM Windows DOWNLOAD PROGRAM Vx.xx.exe`".
2. Double Mouse-Click on the Download Program Icon to execute the program. The Download Program Screen shown in Figure 6-3 will then appear.

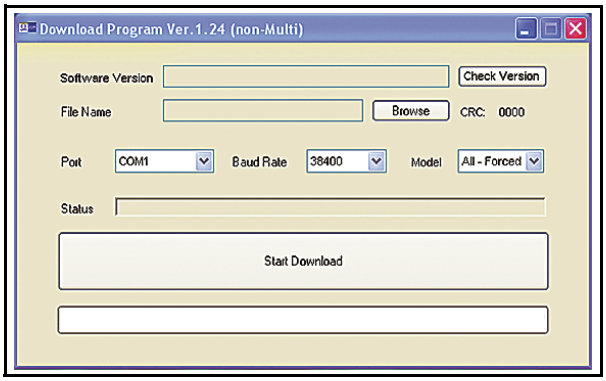

Figure 6-3 Initial Download Program Screen

NOTE: As an option, this program may be used to download Firmware to a DBV while it's in a Normal Operating Mode. To do so; re-start the procedure, ignore the Dip Switch setting instructions outlined in Step 5 on Page 6-2, and select 'DBV300' in the 'Model' Pull-down Menu (See Figure 6-4 d) instead of selecting 'All-Forced' when performing Step 3 that follows.

3. On the Download Program Screen, verify that the 'Port' Select Pull-down Menu is set to 'COM1', verify that the 'Baudrate' is set to a '38400' baud and that the 'Model' is set to 'All-Forced' (See Figure 6-4 a).
4. To verify the communication link between the PC and the DBV-30X, select and Mouse-click on the 'Check Version' Screen Button (See Figure 6-4 b). The DBV will respond by displaying the Firmware Version currently loaded into the CPU Memory listed in the 'Software Version' Window (See Figure 6-4 c).

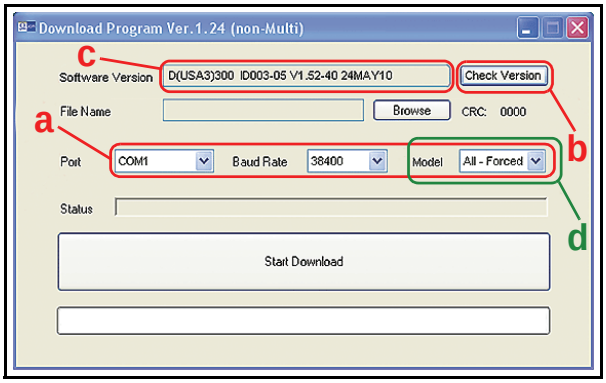

Figure 6-4 Port, Baudrate & Version Check

NOTE: If the current Software Version is not displayed, the most likely cause is a communications error. After 10 seconds of no response, the program will generate an error message advising the user to check cable connections and ensure that power is applied to the Unit.

5. To select the desired Firmware File for download to the DBV being programmed, Mouse-click on the 'BROWSE' Screen Button (See Figure 6-6 a). The program will open a search window allowing you to browse and select the desired file on your PC. Once the desired firmware file is selected, the path and filename of the file will be displayed in the 'File Name' Window (See Figure 6-6 b), and the CRC Checksum value for the file will be displayed to the right of the 'BROWSE' Screen Button (See Figure 6-6 c).

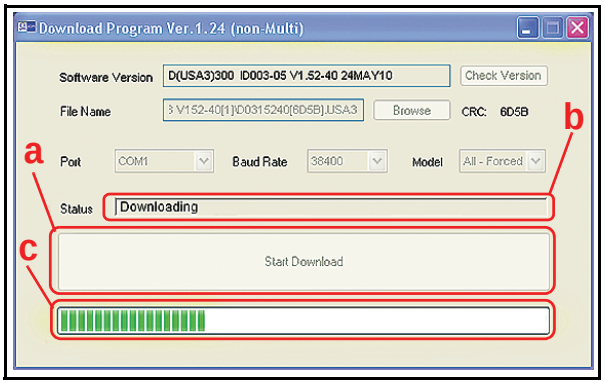

Figure 6-5 Download in Progress Status Bar

6.

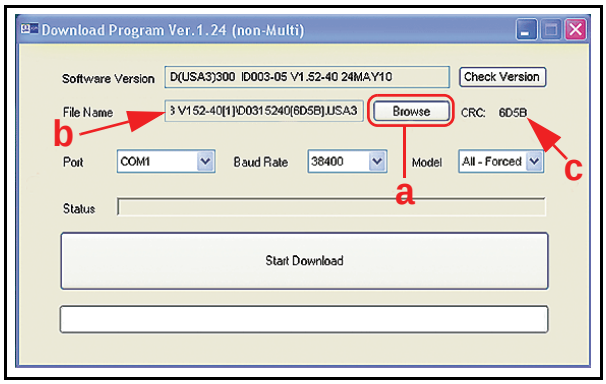

Figure 6-6 Browse Firmware Selection

7. Mouse-Click on the large 'Start Download' Screen Button (See Figure 6-5 a) to transfer (e.g., Flash) the selected file into the DBV Memory. The 'Status' Window (See Figure 6-5 b) will indicate 'Deleting' momentarily, and then change to 'Downloading'. During the file download sequence, a download Progress Bar will appear in the bottom Progress Indication Window as depicted by the Green Bar in Figure 6-5 c.
8. When the Firmware Download is complete (approximately 2 minutes), the program will terminate with "the target file was downloaded successfully" message as shown in Figure 6-7.

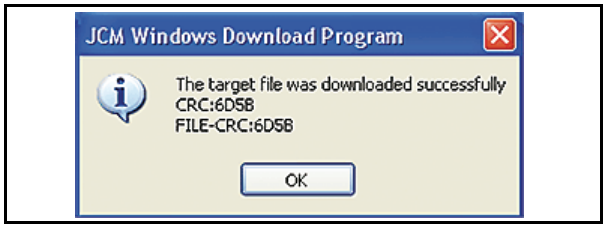

Figure 6-7 Download Successful Screen

9. After exiting the program, set both DIP Switches on the DBV to the 'OFF' position, and recycle power to the unit. The DBV is now ready for use with the newly installed Firmware program.

NOTE: Depending on the Software Protocol being used, it may be necessary to make additional DIP Switch settings for normal operation. Refer to the applicable Software Information Sheet for details pertaining to your specific DBV application.

Adjustment Preparation

This part describes how to adjust the DBV-30X Unit. When the DBV-30X Unit's Acceptance Rate gets low or the DBV-30X Unit's CPU/MAG/Sensor Board has been replaced, the DBV-301 Unit must be readjusted.

Tool Requirements

When adjusting a DBV-30X unit, the following items are required:

- DBV-30X (with Cash Box installed)
- PC (Windows® 98 SE/2000/MS-DOS®/XP Version 5.x/6.x and an open RS-232C Serial Port)
- JCM VM300 or VM301 Power Module or a suitable power source for powering the DBV-30X Unit
- JCM Communication Cable (JAC #501-000192RA or #501-000171R or #501-000209RA)
- Adjustment Program Installer (setup.exe/SETUP.LST/Cab300.CAB)
- White Reference Paper (KS-059, JAC #501-000161)
- Black Reference Paper Type 1 (KS-060, JAC #501-000162)
- Black Reference Paper Type 2 (KS-061, JAC #501-000163).

Installing the Adjustment Program (Cab300.exe)

Perform the following steps to install the Cab300.exe adjustment program:

1. Copy the adjustment program installer (setup.exe/SETUP.LST/Cab300.CAB) into a folder on your PC.
2. Double click on `setup.exe` to start the installation.
3. Follow the instruction shown on the screen to complete the installation.

Initial Set-up

1. Before adjusting the DBV-30X unit, perform the equipment set-up previously illustrated in Figure 6-1 on page 6-1 to ensure proper cable and harness interconnection.

Caution: When connecting the Harness to the DBV-30X Unit, make sure the Power Supply is OFF. Failure to do so may cause an electrical shock and/or permanent damage to the device.

2. Set DIP Switch SW1-8 to ON and apply power to the unit.
3. Check that the Indication LEDs are blinking and that the Green, Yellow and Red Condition LED's light. This indicates that the DBV-30X unit is in the Test Mode.

Adjustment Procedure

To adjust the DBV-30X unit, perform the follow steps:

1. Double click on the `Cab300.exe` Adjustment Program and the window shown in Figure 6-8 will appear.

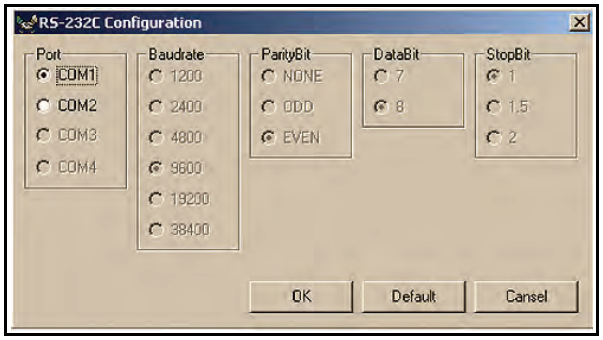

Figure 6-8 RS-232C Configuration Screen

2. Select the desired PC's COM Port No. and click the 'OK' OK Screen Button. The DBV-30X Adjustment program shown in Figure 6-9 will then appear.

NOTE: When replacing the CPU Circuit Board, be sure to write its Serial Number into the DBV-30X unit memory.

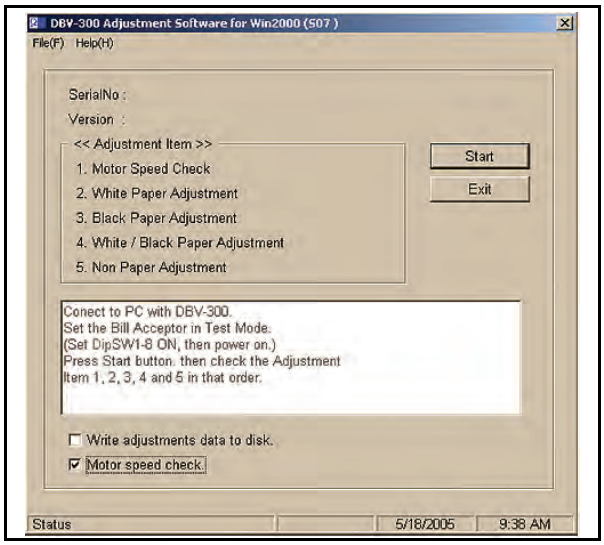

Figure 6-9 S07 Adjustment Program Screen

3. Record the DBV-300 unit's Serial Number and write it into memory by selecting the menu bar's [Help/Change Serial No.] pull down menu (See Figure 6-10).

NOTE: If an error occurs while adjusting the DBV-30X unit, repeat the specific Adjustment program instruction, or turn the DBV-30X unit's power OFF and restart the adjustments again from the beginning.

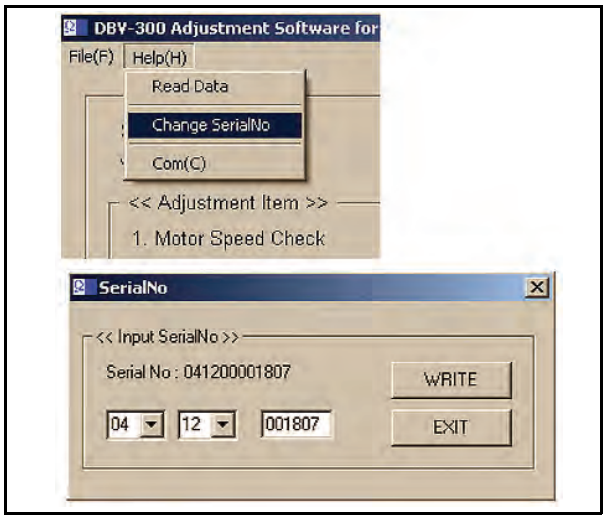

Figure 6-10 Serial Number Input Screen

NOTE: Be sure to firmly set the Cash Box into the DBV-30X unit during this test.

4. Once the new serial number has been entered click the 'WRITE' WRITE Screen Button to enter it into memory and click 'EXIT' EXIT to proceed.
5. Click the 'Start' Start Screen Button to begin the adjustment procedure (Review Figure 6-9). The Motor Speed Check (Adjustment Item #1) will begin.
6. When the Motor Speed Check is finished, the message window shown in Figure 6-11 will appear.

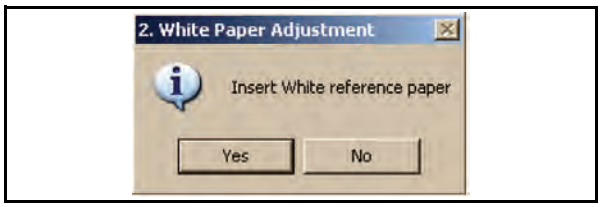

Figure 6-11 Insert White Reference Paper Request Screen

7. Remove the Cash Box and place the White reference paper into the lower guide (See Figure 6-12). Start the White Paper Adjustment Procedure (Adjustment Item #2) by clicking the 'Yes' Yes Screen Button.
8. When the White Paper Adjustment is finished, the message window shown in Figure 6-13 will appear.

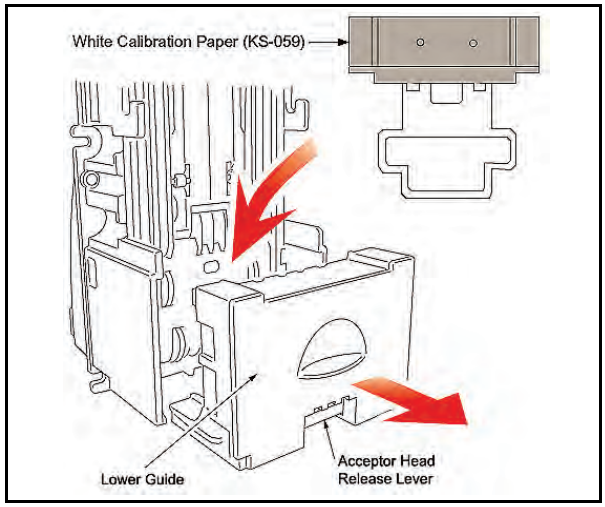

Figure 6-12 Inserting White Calibration Paper

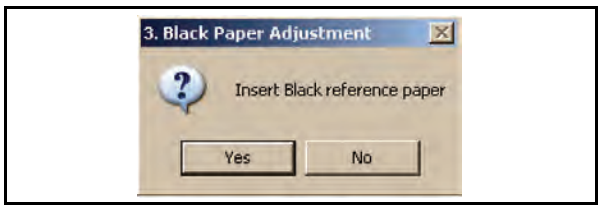

Figure 6-13 Insert Black Reference Paper Request Screen

9. Open the Lower Guide and remove the White Reference Paper.
10. Place Black Reference Paper #1 into the Lower Guide and insert Black Reference Paper #2 into the bill insertion slot (See Figure 6-14 a & b).

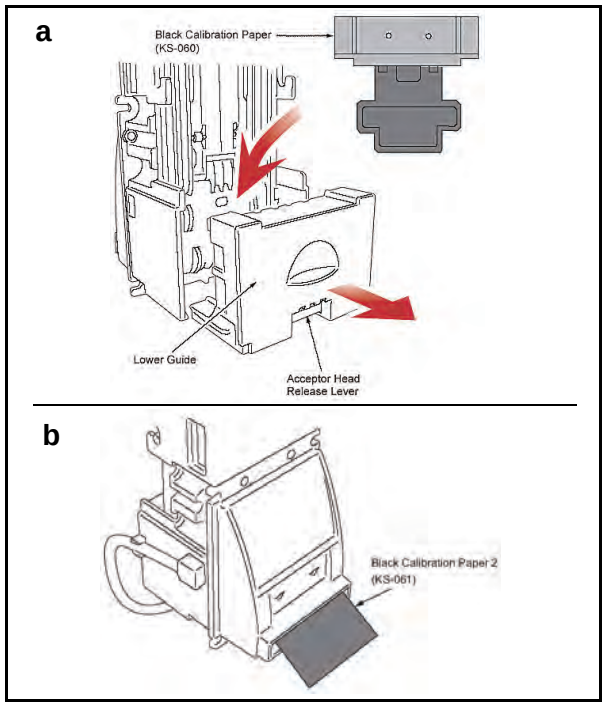

Figure 6-14 Inserting Black Calibration Papers

11. Start the Black Paper Adjustment Procedure (Adjustment Item #3) by clicking the 'Yes' Yes Screen Button.
12. When the Black Paper Adjustment is complete, the message window shown in Figure 6-15 will appear.

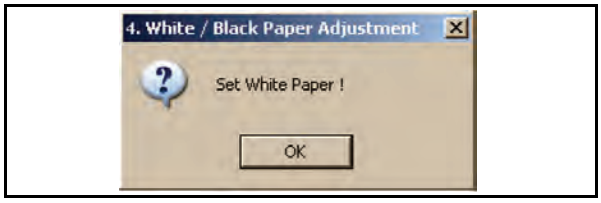

Figure 6-15 Second White Reference Paper Request Screen

13. Remove Black Reference Papers 1 and 2, and replace the White Reference Paper in the Lower Guide.
14. Click the 'OK' OK Screen Button to restart the White level adjustment test for the White/Black Paper Adjustments (Adjustment Item #4).

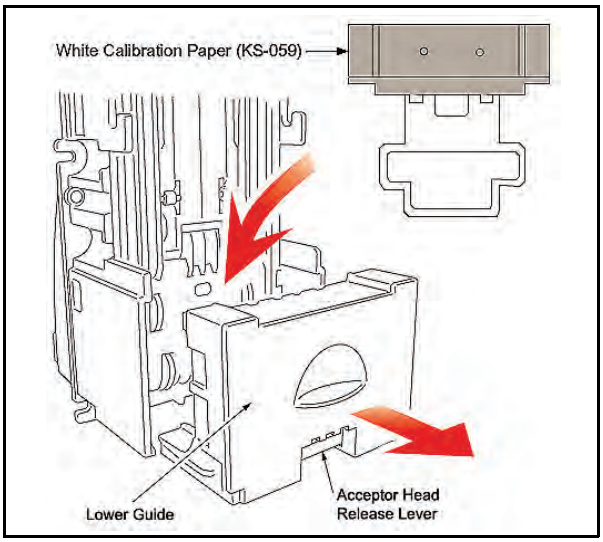

Figure 6-16 Reinserting White Calibration Paper

15. When the White level adjustment of the White/Black Paper Adjustment is finished, the message window shown in Figure 6-17 will appear.

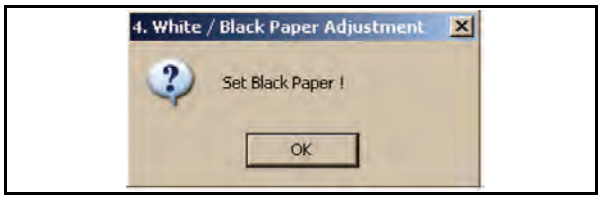

Figure 6-17 Second Black Reference Paper Request Screen

16. Remove the White Reference from the Lower Guide and replace Black Reference Paper #1 into the guide (See Figure 6-18).

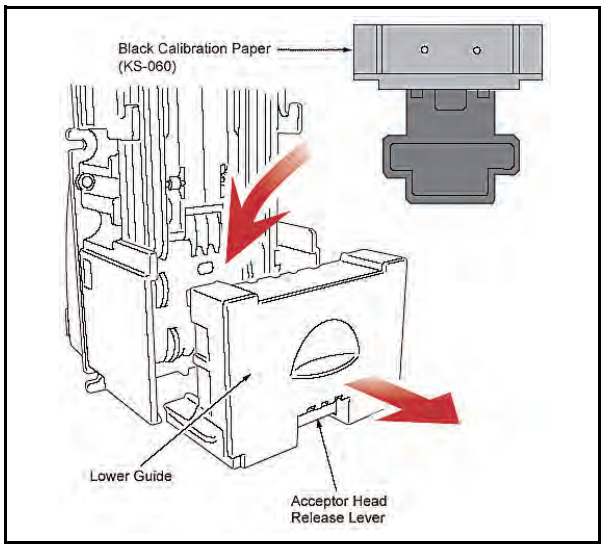

Figure 6-18 Reinserting Black Calibration Paper

17. Click the 'OK' [OK] Screen Button to start the Black level adjustment for the White/ Black Paper Adjustment.
18. Once Steps 7 through 16 repeat several times, the message window shown in Figure 6-19 will appear.

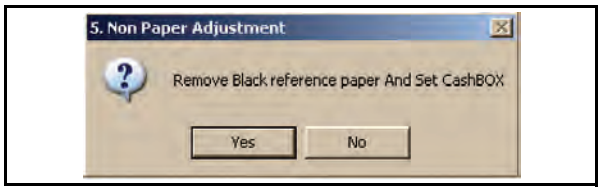

Figure 6-19 Non-Paper Request Screen

19. Remove the Black Reference Paper from the Lower Guide and replace the Cash Box into the DBV-30X unit.
20. Click the 'Yes' [Yes] Screen Button to start Non-Paper Adjustment. The message window shown in Figure 6-20 will then appear.

Figure 6-20 Remove Cash Box Request Screen

21. Remove the Cash Box again and click the 'OK' [OK] Screen Button to start the Non-Paper adjustment.
22. When the Non Paper Adjustment is finished, the message window shown in Figure 6-21 will appear.

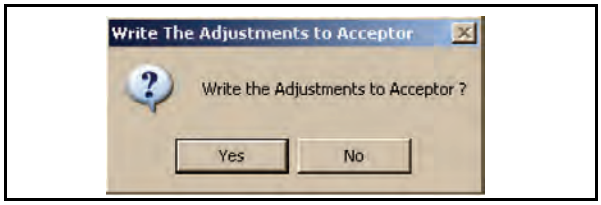

Figure 6-21 Write Adjustments to the Acceptor Request Screen

23. Click the 'Yes' [Yes] Screen Button to write the adjustment data into the DBV-30X unit's memory.
24. When the data is finished writing to memory, the message window shown in Figure 6-22 will appear.

Figure 6-22 Adjustment Complete Screen

25. Click the 'OK' [OK] Screen Button to Complete the Adjustment Procedure.

This is the end of the DBV-30X Adjustment Procedure.

THIS PAGE INTENTIONALLY LEFT BLANK

Optipay® BV
DBV-30X Bill Validator
Section 7

7 PALM PILOT FLASH MEMORY DOWNLOADING

This section provides download instructions for the Optipay® BV DBV-30X Bill Acceptor. The information within contains the following features:

- Downloading to Flash Memory Description
- Tool Requirements
- Information Menu Selection
- Diagnostics Menu Selection
- Program Download Menu Selection
- Selecting a Download ROM
- Accepting a Log Menu Selection
- Starting the Download Program
- Downloading Procedure Examples.

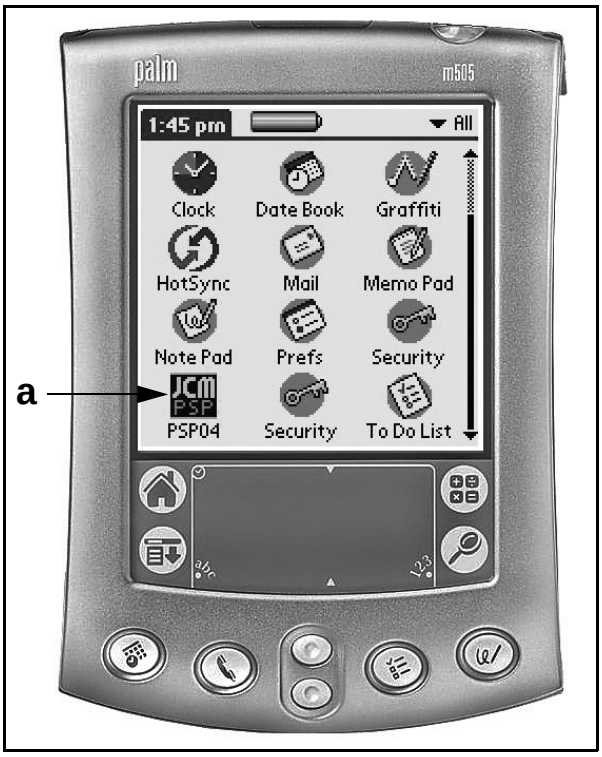

Figure 7-1 Typical Palm Pilot Handheld & Software

Tool Requirements

A Palm Pilot® handheld device is required to configure the DBV-30X Bill Acceptor using JCM PSP-04© Acceptor Program software.

Equipment Required

- A Palm Pilot® Handheld – M125, M130, M500, M505, M515, Tungsten T, Tungsten T2, and Tungsten C Handheld PDA's (See Figure 7-1)
- DBV Communication Cable (JAC #501-000192RA or #400-100219)
- JCM PSP-04 Acceptor Program for the Palm Pilot® handheld
- PC with Windows 2000 or XP O/S
- Palm Pilot® Application Suite
- Hot Sync Cradle or Cable*

** Refer to the Palm Pilot User's manual for program installation and Hot Sync user instructions.*

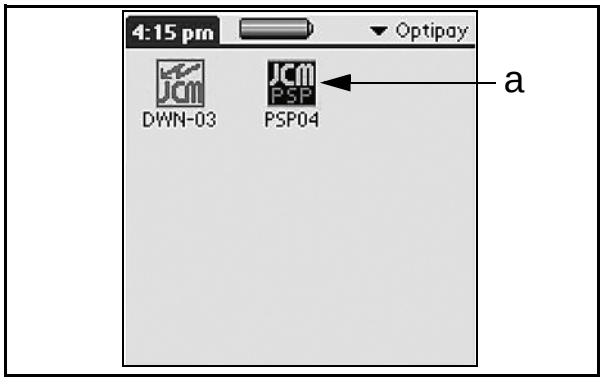

Figure 7-2 PSP-04 Application Selection

Information Menu Selection

To use the Palm Pilot® programming application menu perform the following steps:

1. Turn on the Palm Pilot® and select the JCM PSP-04 main Menu Application (See Figure 7-1 a or Figure 7-2 a).
2. Select the [Settings] Screen Button on the **Palm Setting Program** main Menu Screen (See Figure 7-3 a).
3. Select the [Information...] Screen Button on the **Settings** menu Screen (See Figure 7-4 a), or [Back] to return to the previous Screen.

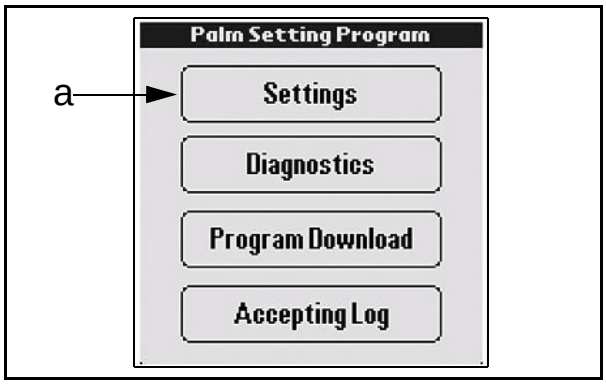

Figure 7-3 Settings Menu Selection

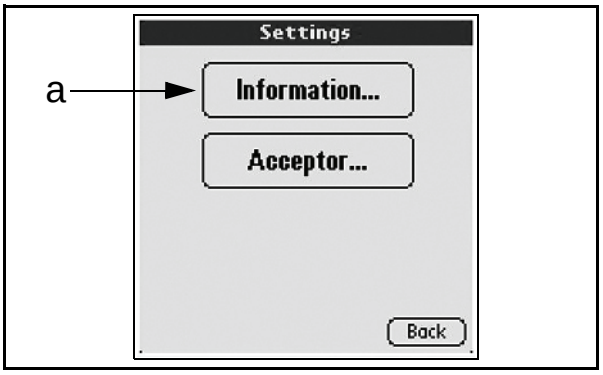

Figure 7-4 Information Menu Selection

4. The following typical configuration settings for a Validator are shown in Figure 7-6 when the [Information...] Screen Button is selected:
   a. The installed Firmware Version – V1.33.
   b. The list of acceptable denominations.
   c. The Banknote values enabled ($1 and $5 Banknotes).

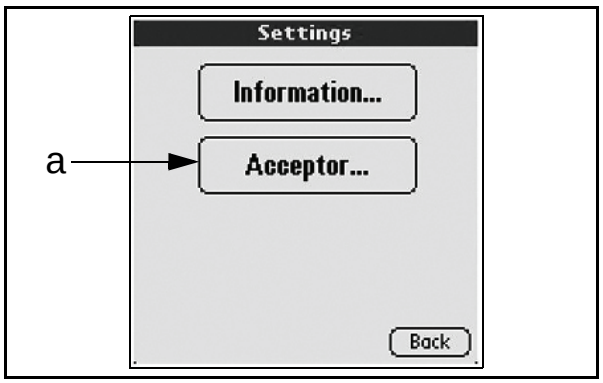

Figure 7-5 Acceptor Mode Selection

   d. The [Rec] Screen Button to retrieve refreshed data from the Validator.
   e. The [Back] Screen Button to return to the **Settings** Menu Screen.

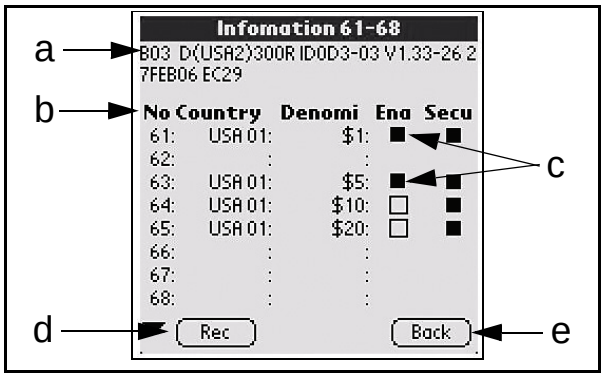

Figure 7-6 Typical Configuration Settings

5. Once back on the **Settings** Screen, select the [Acceptor...] Screen Button (See Figure 7-5 a).
6. The **Acceptor** Screen Functions illustrated in Figure 7-7 are as follows:
   a. **Enable** - allows the user to enable or disable Banknote acceptance on selected channels.
   b. **Hi Secu** - allows the user to enable or disable High Security Banknote acceptance mode.
   c. **Comm** - N/A. Reserved for future use.
   d. **Inhibit** - when selected, disables the DBV.
   e. **Direction** - allows the user to specify in which directions Banknote can be accepted into the DBV-30X.
   f. **Option** - N/A. Reserved for future use.

   To make a change, select or de-select the desired Check Box, and Mouse-click on the associated [Send] Screen Button.
7. Select [Back] to return to the **Settings** main Menu Screen (See Figure 7-7 a).

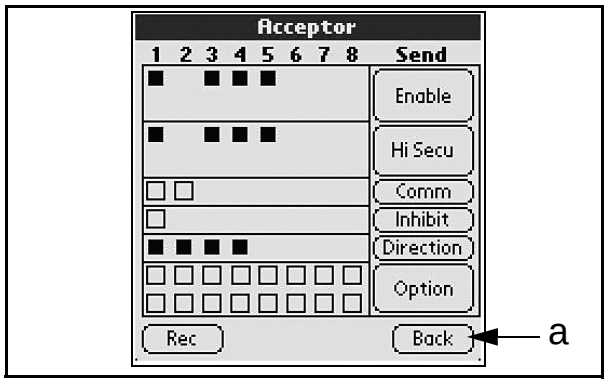

Figure 7-7 Acceptor Screen Functions

Once on the **Settings** Menu Screen, select the [Back] Screen Button again to return to

the **Palm Setting Program** main Menu Screen (See Figure 7-8 a).

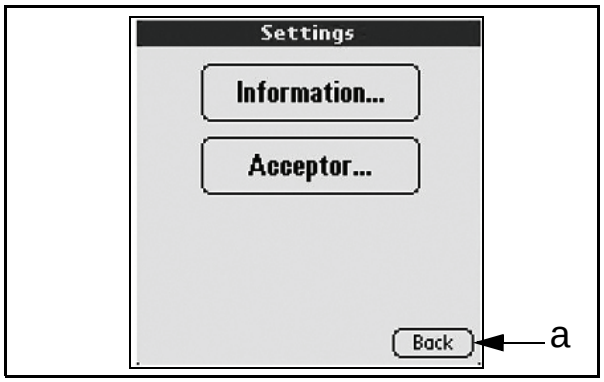

Figure 7-8 Returning to the Settings Screen

Diagnostics Menu Selection

8. On the **Palm Setting Program** main Menu Screen select the [Diagnostics] Screen Button (See Figure 7-9 a).

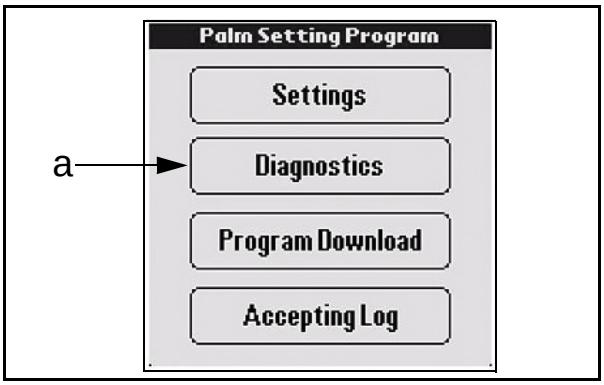

Figure 7-9 Diagnostics Mode Selection

9. The **Diagnostics** Screen shown in Figure 7-10 "a" through "h" is used to test the following DBV functions:
   a. Forward Motor Speed RPM.
   b. Reverse Motor Speed RPM.
   c. Stacker Test.
   d. Run Test.
   e. Solenoid Test.
   f. Sensor 1 Transmit/Receive Test.
   g. Sensor 2 Transmit/Receive Test.
   h. DIP Switch Settings Test.
10. Select the [Back] Screen Button to return to the **Settings** Menu Screen.

Program Download Menu Selection

Perform the following steps to initiate a program download:

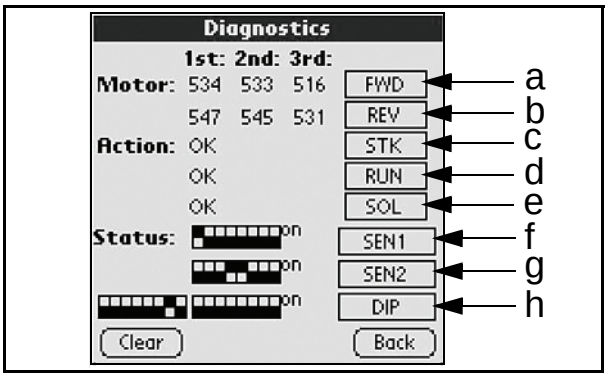

Figure 7-10 Diagnostics Screen Functions

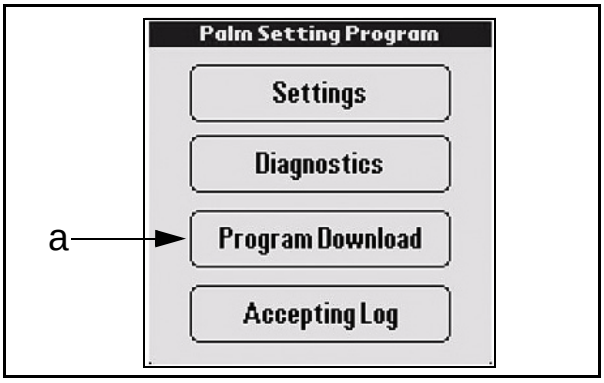

Figure 7-11 Program Download Menu Selection

1. Select the [Program Download] Screen Button on the **Palm Setting Program** main Menu Screen (See Figure 7-11 a).
2. Select the Software Version to be downloaded (See Figure 7-12 a).
3. Select [Send] to transmit the software to the Validator (See Figure 7-12 b).

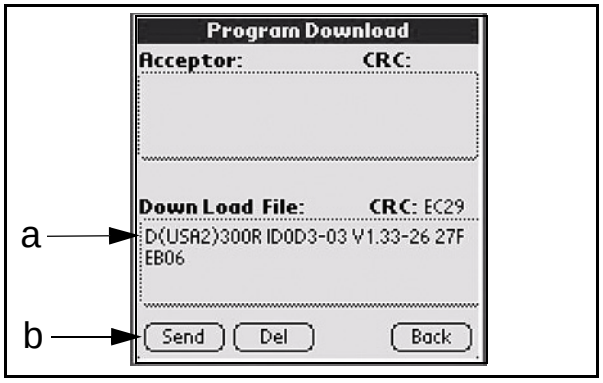

Figure 7-12 Program Download Screen

NOTE: The **Download File:** *Box shows the firmware version currently scheduled for download to the DBV. To choose a different version to send, mouse-click on any open area inside of the* **Download File:** *Box.*

Selecting a Download ROM

Having selected any open area inside of the **Download File:** Box:

1. Select the Firmware Version from the available list on the **Down Load File Select** Screen that appears (See Figure 7-13 a).
2. Mouse-click on the Back Screen Button to return to the **Program Download** main Menu Screen (See Figure 7-13 b).

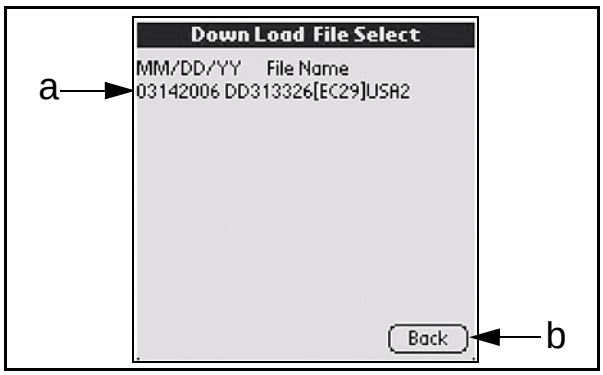

Figure 7-13 ROM Select Screen

3. Select Send on the **Program Download** main Menu to start the selected Firmware download (See Figure 7-14 a).

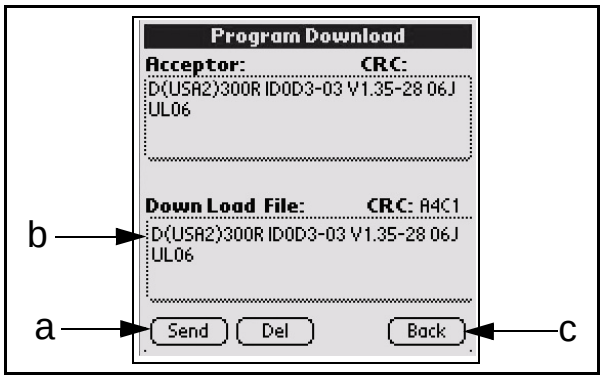

Figure 7-14 Download Send Command

4. During the download, incrementing numbers will appear in an inset **Now Data Trans...** Window left of the correct final value shown at right (See Figure 7-15 a).

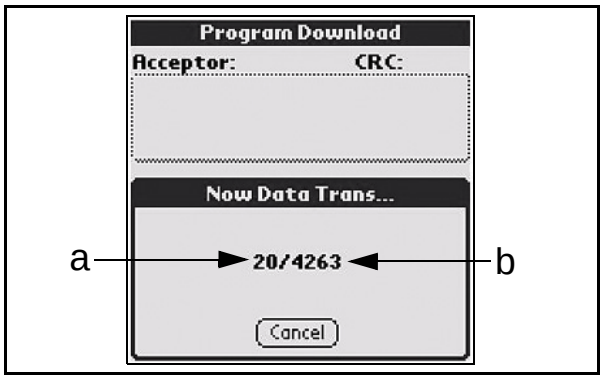

Figure 7-15 Download Transfer Screen

NOTE: Ensure that the number of data bytes loaded versus the total data bytes needed to complete the download process agree when the download is complete (i.e., a = b in Figure 7-15).

5. Once the download is complete, select any open area in the **Acceptor:** Box (Review Figure 7-14).
   The program will check the DBV, and report the Firmware Version currently installed. Verify that the version listed in the **Acceptor:** Box agrees with the version listed in the **Download File:** Box.
6. Mouse-click the Back Screen Button to return to the **Palm Setting Program** main Menu Screen (Review Figure 7-14 c).

Accepting Log Menu Selection

1. On the **Program Download** main Menu Screen, select the Accepting Log menu Screen Button (See Figure 7-16 a).

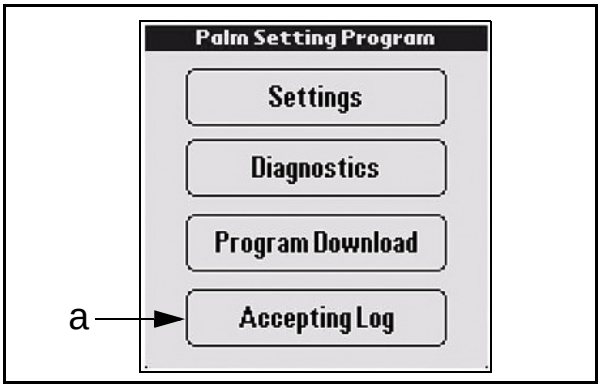

Figure 7-16 Accepting Log Mode Selection

2. In the Figure 7-17 **Accepting Log** Menu choose:
   a. Rec to download the Accepting Log.
   b. Init to initialize or clear the Validator's memory.

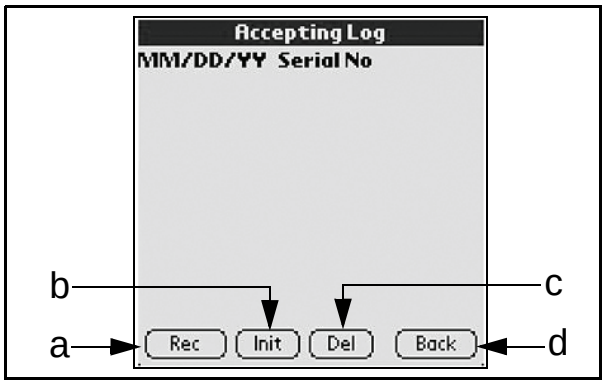

Figure 7-17 Accepting Log Menu

c. (Del) to clear all downloaded Accepting Logs, or

d. (Back) to return to the **Palm Setting Program** Menu Screen of Figure 7-16.

3. Upon choosing (Rec) to retrieve a Log File, the Figure 7-18 **Select/Enter Identifiers** Menu will appear allowing the following Identifiers to be modified:

Location: - The machines location.

Asset ID: - The machines asset identification number.

Technician: - The servicing technicians identification.

Restrictions: - Any restrictions.

Manufacturer: - The machine manufacturer's name.

Product: - The type of product.

If none of the Identifier information requires changing, Mouse-click on (OK) to advance to the Figure 7-24 Screen at this time.

Figure 7-18 Select/Enter Identifiers Menu

When a choice is selected, [Edit List] will appear allowing the new information Field to be selected (See Figure 7-19 a).

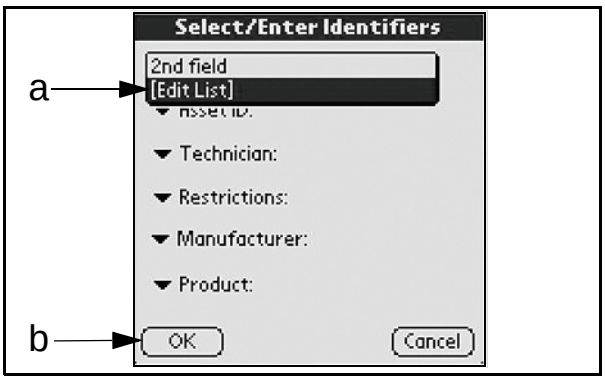

Figure 7-19 Selecting Identifier's Edit List

NOTE: Depending on the field selected, 1st Field, 2nd Field, 3rd Field, 4th Field, 5th Field, 6th Field etcetera will appear in the Figure 7-20 **List: Location** *Box for edit selection.*

4. Mouse-click on [Edit List], and the **Edit List** Screen shown in Figure 7-20 will appear.

Figure 7-20 Edit List Primary Menu Screen

5. A **List: Location** Box will appear in Figure 7-20 allowing selection of a location Field.

6. On the Edit List Screen Mouse-click either (Edit) or (New) to enter changed or new Identifier information. Upon selecting either (Edit) or (New), the **Edit/New Entry** Submenu shown in Figure 7-21 will appear.

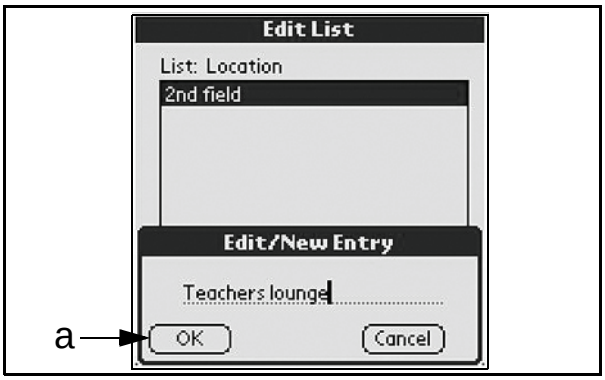

Figure 7-21 Edit List Sub Menu Screen

7. Use the Palm Pilot® Keyboard to enter the changed or new Identifier information into the available Field Dotted Line (See Figure 7-22 a).

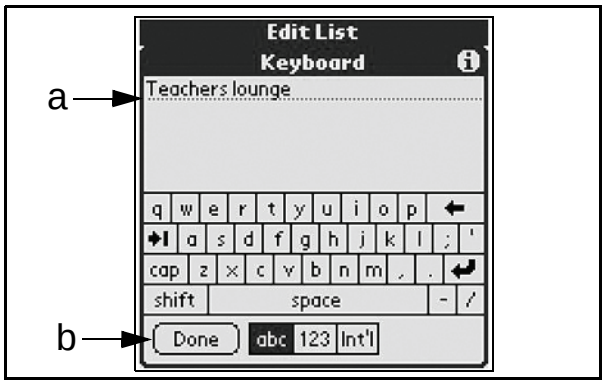

Figure 7-22 Typical Palm Pilot Keyboard Menu

8. Once the change information is entered, *Mouse*-click on Done on the Keyboard Menu (See Figure 7-22 b), OK on the **Edit/New Entry** Sub-menu (Review Figure 7-21 a) and then on OK on the **Edit List** Screen (Review Figure 7-19 b) to return to the **Accepting Log** main Menu Screen.
9. Click on the **"download record number"** itself to view the related log data (See Figure 7-23 a). The **Accepting Log** Screen illustrated in Figure 7-24 will then appear.

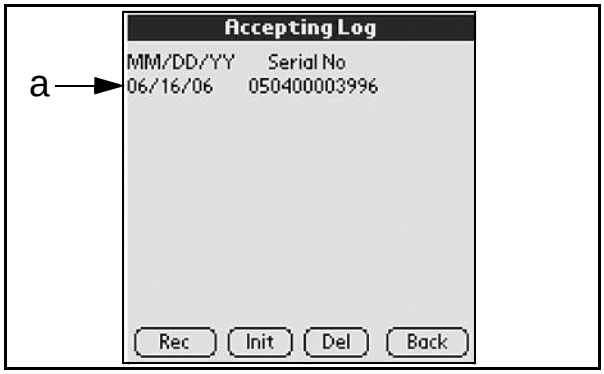

Figure 7-23 Viewing Record Log Data

10. Select Next to view additional pages of the selected **Accepting Log** (See Figure 7-25).
11. Page two of the **Accepting Log** shown in Figure 7-25 lists the last 16 Banknotes accepted, their denomination and the direction in which the Banknote was inserted.

Figure 7-24 Viewing Specific Log Data 1

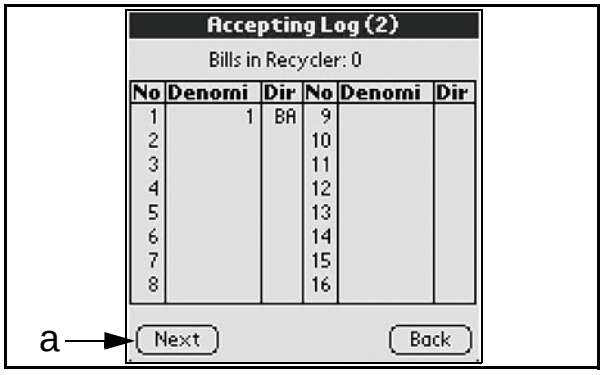

Figure 7-25 Viewing Page Two Log Data

12. Page three of the **Accepting Log** (See Figure 7-26) lists the total Banknote denominations counted, those accepted and those rejected as follows:
    a. No. – The specific Banknote type count
    b. Denomi – The denomination
    c. Accept – The number of the specific Banknotes accepted
    d. Reject – The number of the specific Banknotes rejected (See Figure 7-26 a, b, c, & d respectively).

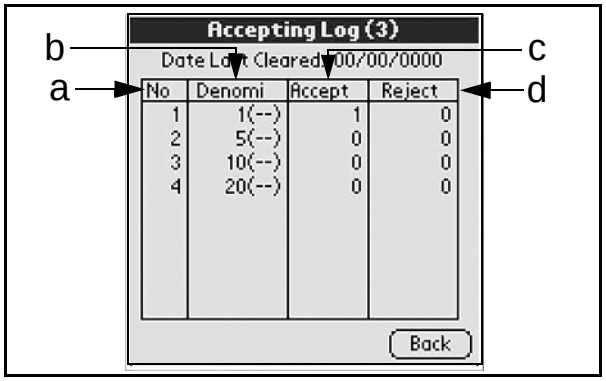

Figure 7-26 Viewing Page Three Log Data

This completes the Flash Memory Downloading Procedure.

Optipay® BV Series
DBV-30X Bill Validator
Section 8

8 EXPLODED VIEWS/PARTS LISTS

This section provides the following wiring diagrams for the Optipay® BV DBV-30X Bill Validator (See Figure 8-1 through Figure 8-13).

- DBV Primary Component Parts
- Frame and Upper/Lower Guide Exploded View & Parts List
- Pusher Mechanism Assembly Exploded View & Parts List
- 200 Note Cash Box Unit Exploded View & Parts List
- 300 Note Cash Box Unit Exploded View & Parts List
- 500 Note Cash Box Unit Exploded View & Parts List
- 1000 Note Cash Box Unit Exploded View & Parts List
- SD Module Unit Exploded View & Parts List
- Snack Mask Unit Exploded View (Parts List
- Lock Module Unit Exploded View & Parts List.
- Euro SD Type Faceplate Exploded View & Parts List
- Waterproofing Kit Exploded View & Parts List.
- DBV-30X-SU Type 2 Bezel Kit Exploded View & Parts List
- DBV-30X Euro Bezel Kit Exploded View & Parts List.

DBV-30X Primary Component Parts

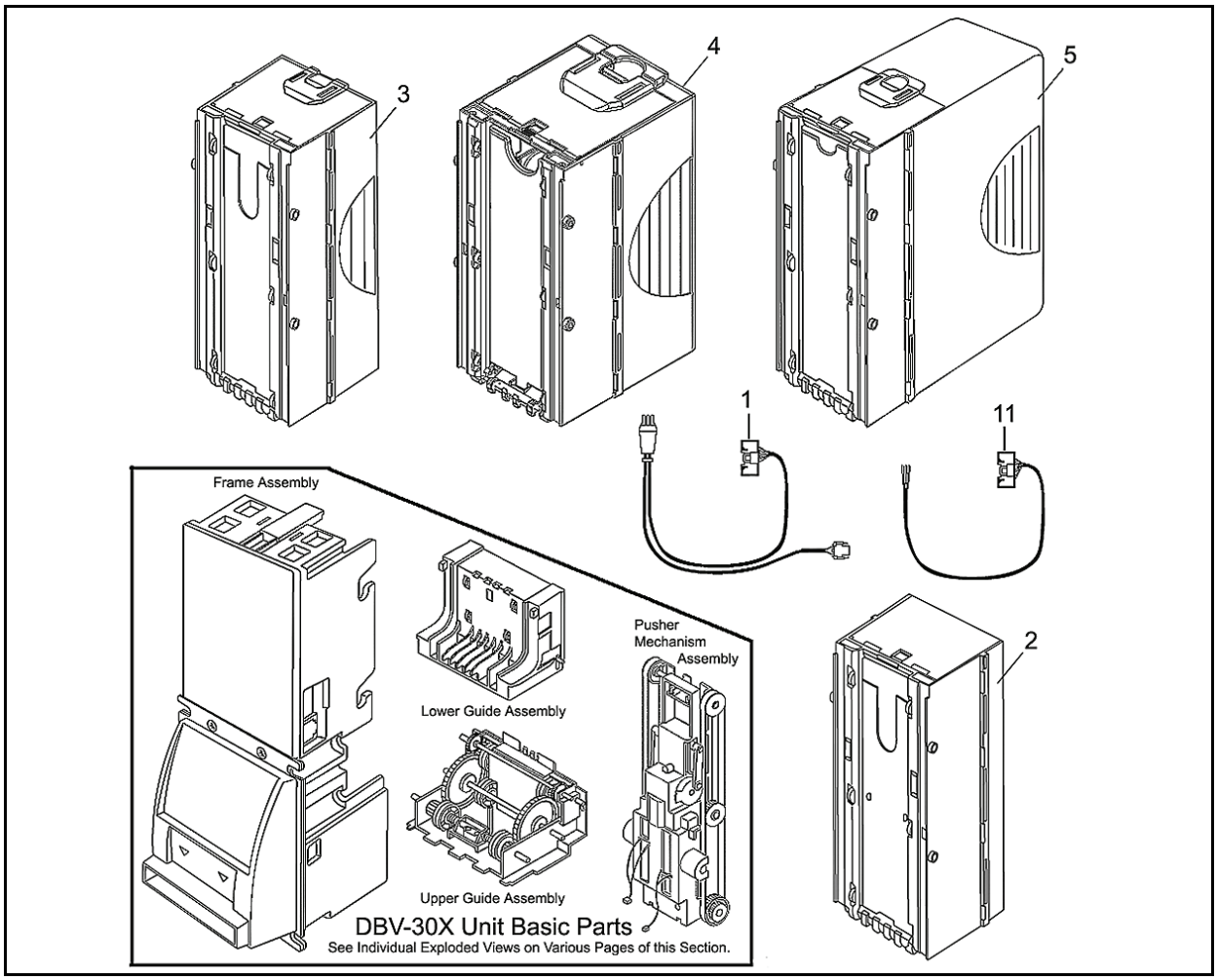

Figure 8-1 DBV-30X Bill Validator Primary Component Parts Exploded View Diagram (Part 1)

DBV-30X Primary Component Parts (Continued)

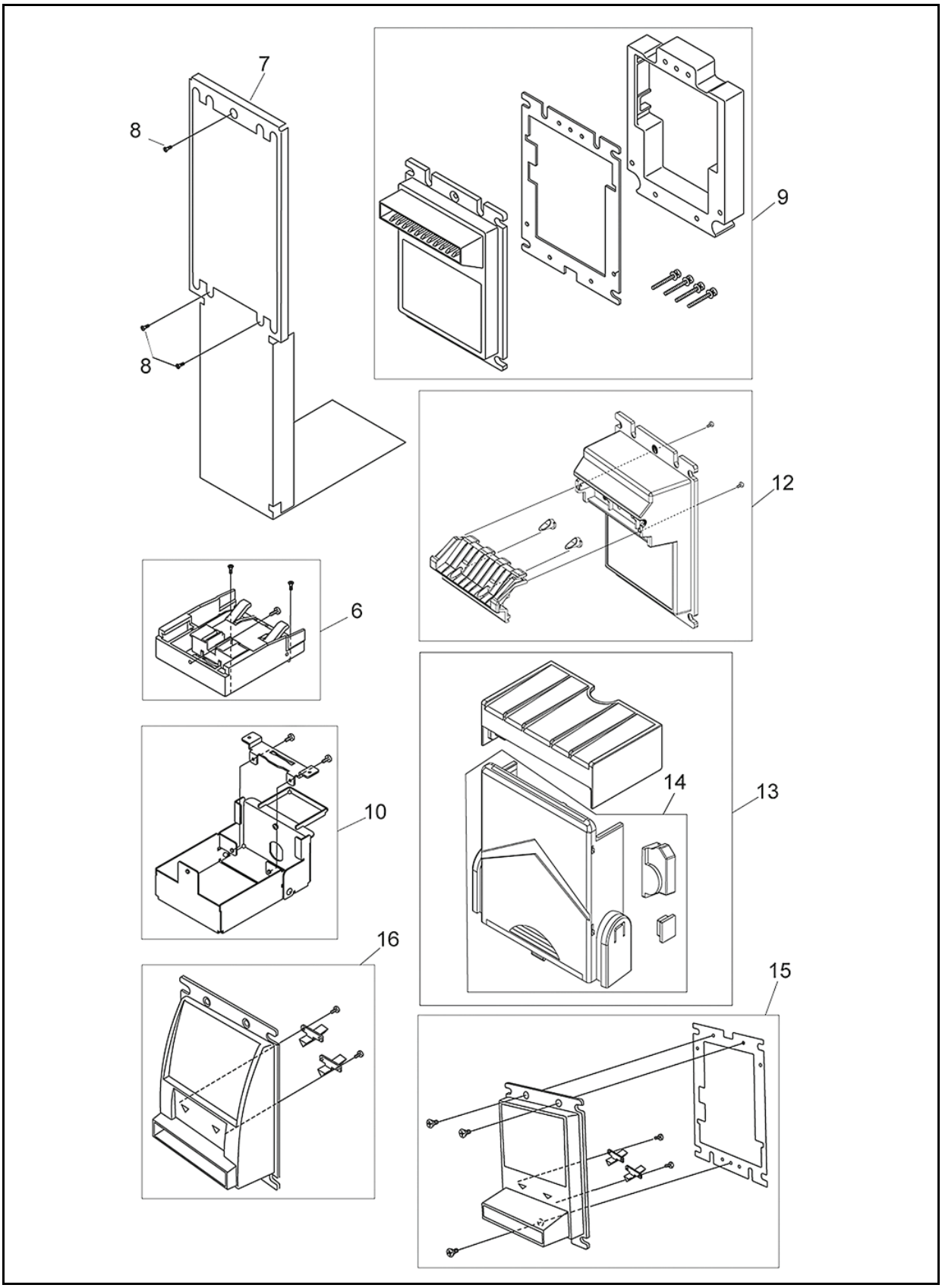

Figure 8-2 DBV-30X Bill Validator Primary Component Parts Exploded View Diagram (Part 2)

Table 8-1 DBV Primary Parts List

No.	EDP No.	Mfg. Part No.	Description	Remarks
1	118761	3210-05-03A	MDB Harness	For DBV-301 Only
2	111023		200 Notes Cash Box	
3	118171		300 Notes Cash Box	
4	134057		500 Notes Cash Box	
5	115148		1000 Notes Cash Box	
6	120827		SD Module	For DBV-30X-SD Only
7	120460	4047PT0401	SD Bracket for Snack Mask	For DBV-30X-SD Only
	125719	4047PT0402	SD Bracket for Standard & Euro Bezel	For DBV-30X-SD Only
8	017052		M3x8 Plate Screws	For DBV-30X-SD Only
9	119008		Snack Mask Kit	
10	121494		Lock Module	
11	118746	3210-05-05C	Optional Harness R	
12	133864		Euro SD Type Faceplate Kit	
13	132773		DBV-30X-SU Waterproof Kit	
14	132774		DBV-30X-SU with RC-10 Waterproof Kit	
15	187355		DBV-30X-SU Type Bezel Kit 2	
16	186575		DBV-30X-Euro Bezel Kit	

Frame and Upper/Lower Guide Assembly

Frame and Upper/Lower Guide Assembly Exploded View

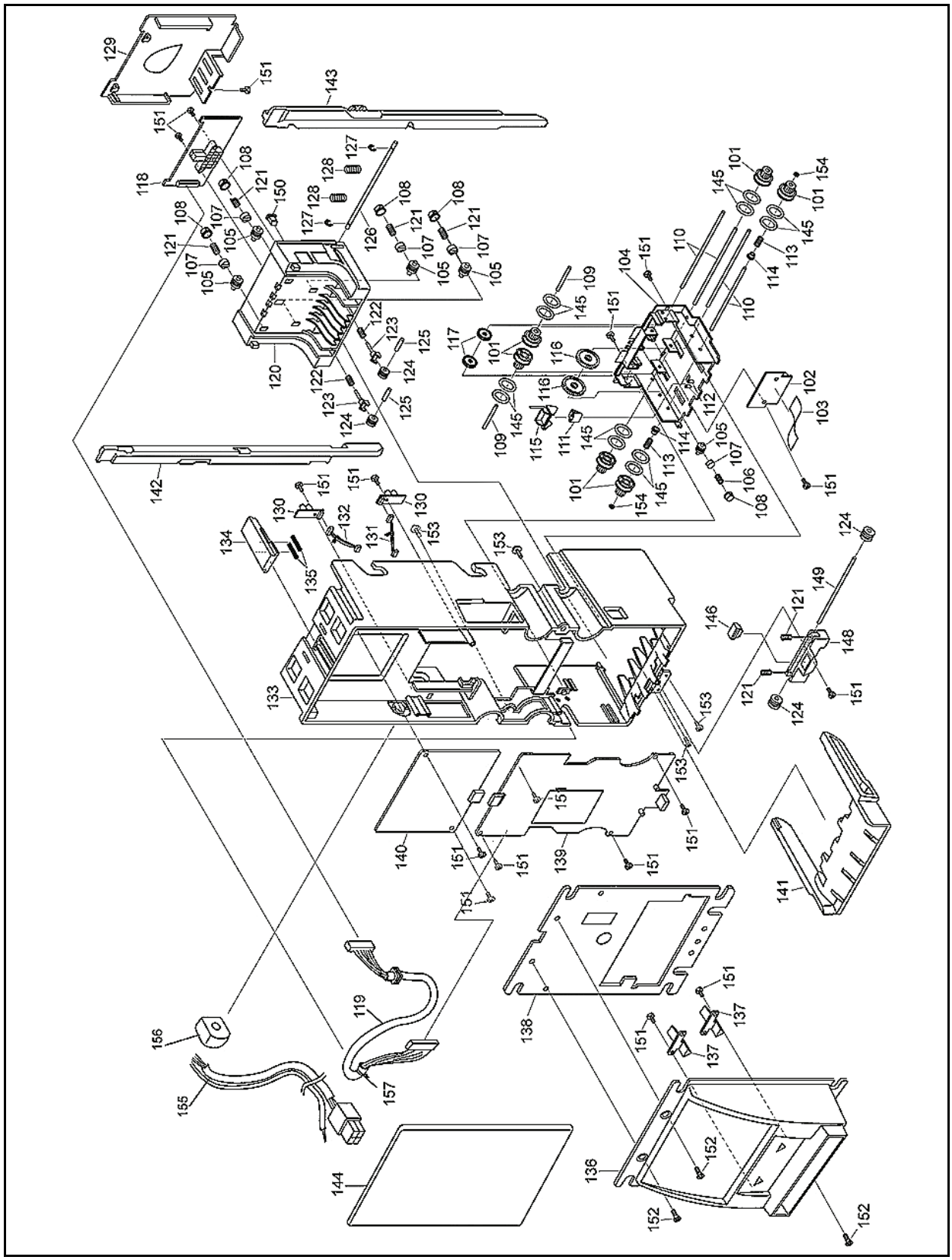

Figure 8-3 Frame and Upper/Lower Guide Assembly Exploded View Diagram

Frame and Upper/Lower Guide Assembly Parts List

Table 8-2: Frame and Upper/Lower Guide Assembly Parts List

No.	EDP No.	Mfg. Part No.	Description	Qty.	Remarks
101	118648	4019GE0103A	GEAR C R	4	
102	116850	4019-3210-06-03D-01	SENSOR PCB ASSY R	1	
103	095378	FFC28 PIN 60mm	FLEXIBLE HARNESS	1	
104	118652	4019RE0102B	UPPER GUIDE R	1	
105	118723	4019RO0101A	ROLLER A R	5	
106	066077	0643CS0102A	TRANSPORT ROLLER SPRING	1	
107	118658	4019RE0107A	ROLLER GUIDE B R	5	
108	118657	4019RE0106A	ROLLER GUIDE A R	5	
109	095532	4019SH0103	ROLLER SHAFT B	2	
110	095531	4019SH0102	ROLLER SHAFT A	2	
111	118668	4019RE0114A	SENSOR GUIDE C R	1	
112	118666	4019RE0112A	SENSOR GUIDE A R	1	
113	107896	4019CS0101A	LEVER SPRING	2	
114	101151	Z3240-6115	PBT BUSHING	2	
115	118663	4019RE0110A	LEVER R	1	
116	118645	4019GE0101A	GEAR A R	2	
117	118646	4019GE0102A	GEAR B R	2	
118	116846	4019-3210-06-02G-01	MAG PCB ASSY R	1	
119	121239	3210-05-01C	HARNESS R	1	
120	118709	4019RE0103B	LOWER GUIDE R	1	
121	075183	C-125	SPRING (NO.1024)	4	
122	107893	4019CS0102	ROLLER TENSION SPRING	2	
123	118660	4019RE0108A	ROLLER GUIDE C R	2	
124	118724	4019RO0102A	ROLLER B R	4	
125	092230		2x12 PARALLEL PIN	2	
126	095530	4019SH0101	LOCKING SHAFT	1	
127	003707		E-RING Ø3 SUSTAINER	2	
128	064533	C-147	SPRING (NO.1052)	2	
129	118655	4019RE0105B	LOWER GUIDE COVER R	1	
130	116852	4019-3210-06-05A-01	SMALL PCB ASSY R	2	
131	118743	3210-05-06C	TRANSPORT HARNESS L R	1	
132	118745	3210-05-07A	TRANSPORT HARNESS R R	1	
133	118711	4019RE0101E	BASE FRAME R	1	
134	118664	4019RE0111A	CASH BOX STOPPER R	1	
135	095880	DC-097	SPRING	2	
136	118684	4019RE0401A	FACE PLATE R	1	
	120443	4019RE0415	SU-EURO Faceplate		For Euro, & RMB

Table 8-2: Frame and Upper/Lower Guide Assembly Parts List (Continued)

No.	EDP No.	Mfg. Part No.	Description	Qty.	Remarks
137	118686	4019RE0402A	LED GUIDE R	1	
	120444	4019RE0416	ENTERENCE FACEPLATE LED GUIDE		For Euro & RMB
138	118789	4019PT0401C	FACEPLATE BRACKET	1	
139	116842	4019-3210-06-01F-01	CPU PCB ASSY R	1	
140	118754	LSEP1114B1HB	DC24V POWER SUPPLY ASSY	1	DBV-301, DBV-303 changed from EDP #095376
	115124	FP2281A	AC117V POWER SUPPLY ASSY		DBV-302 Only
141	118687	4019RE0403A	FB GUIDE-67 R	1	
	108887	4019RE0409A	FB GUIDE-71 R		
	115705	4019RE0412A	FB GUIDE-73 R		
142	118688	4019RE0404A	SB GUIDE-67L R	1	
	108888	4019RE0410A	SB GUIDE-71L R		
	115706	4019RE0413A	SB GUIDE-73L R		
143	118690	4019RE0405A	SB GUIDE-67R R	1	
	108889	4019RE0411A	SB GUIDE-71R R		
	115707	4019RE0414A	SB GUIDE-73R R		
144	118654	4019RE0104A	BASE COVER R	1	
145	095876		0-RING P-16 (EPDM70)	10	
146	118667	4019RE0113B	SENSOR GUIDE B R	1	
~~147~~	~~101906~~	~~4019PE0103~~	~~SG REFLECTOR SEAL~~	~~2~~	Removed/Deleted
148	118661	4019RE0109A	ROLLER GUIDE D R	1	
149	095533	4019SH0104	ROLLER SHAFT C	1	
150	118915	0666RE0126B	PRISM GUIDE	1	
151	055413		2.6x6 TIGHT BINDING PHILLIPS	17	
152	005332		3x5 FLAT HEAD SCREW Cm	3	
153	046976		3x8 SCREW with WASHER Fe Cm	4	
154	099953		Ø3x6x0.2 POLLY VYNAL SLIDER	2	
155	135518	3210-05-19A	24VDC CONNECTING HARNESS	1	DBV-303 Only
	115146	3210-05-15A	AC117V CONNECTING HARNESS	1	DBV-302 Only
156	115147	BU-3270-L	CORD BUSHING	1	DBV-302 Only
157	057401	BK-01	BLACK CONVEX	1	

Pusher Mechanism Assembly

Pusher Mechanism Assembly Exploded View

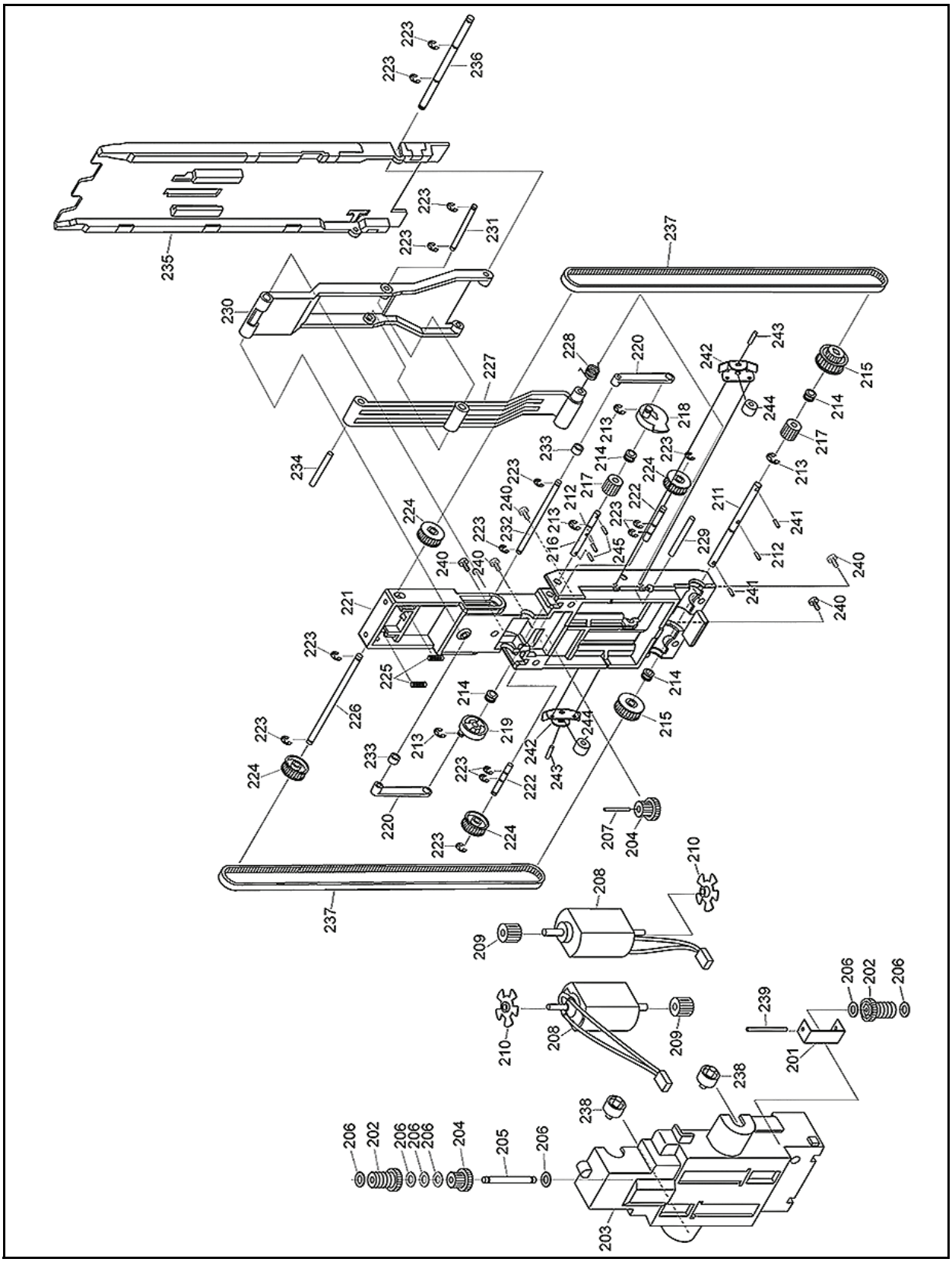

Figure 8-4 Pusher Mechanism Assembly Exploded View Diagram

Pusher Mechanism Assembly Exploded View Parts List

Table 8-3: Pusher Mechanism Assembly Parts List

No.	EDP No.	Mfg. Part No.	Description	Qty.	Remarks
201	107944	4019PT0201A	MOTOR GUIDE C	1	
202	118640	4040GE0202A	WORM GEAR	2	
203	118670	4019RE0201A	MOTOR GUIDE A R	1	
204	118643	4019GE0202A	GEAR E R	2	
205	095542	4019SH0209	GEAR SHAFT A	1	
206	107847		2.1x6.5x0.2 POLLY VYNAL WASHER	7	
207	095544	4019SH0211	GEAR SHAFT C	1	
208	095382	182331-218-G-3	DC MOTOR	2	
209	118642	4019GE0201A	GEAR D R	2	
210	118712	4019RE0208A	ENCORDER R	2	
211	095534	4019SH0201	DRIVE SHAFT	1	
212	095877		1.2x6 PARALLEL PIN	2	
213	003707		E-RING Ø3 SUSTAINER	4	
214	118677	4019RE0209A	BUSHING R	4	
215	118649	4019GE0205A	GEAR F R	2	
216	095536	4019SH0203	SHAFT ARM A	1	
217	118685	4019GE0204A	WORM WHEEL R	2	
218	118674	4019RE0207C	PUSHER ARM DR R	1	
219	118691	4019RE0210C	PUSHER ARM DL R	1	
220	118673	4019RE0206B	PUSHER ARM C R	2	
221	118707	4019RE0202C	MOTOR GUIDE B R	1	
222	095541	4019SH0208	IDLER SHAFT B	2	
223	003705		E-RING Ø2 SUSTAINER	12	
224	118651	4019PU0201A	PULLEY A R	4	
225	061095	C-170	SPRING (NO. 1035)	1	
226	095535	4019SH0202	IDLER SHAFT A	1	
227	118718	4019RE0205C	PUSHER ARM B R	1	
228	109928	4019KS0201A	PUSHER SPRING	1	
229	095540	4019SH0207	SHAFT ARM E	1	
230	118671	4019RE0204B	PUSHER ARM A R	1	
231	095539	4019SH0206	SHAFT ARM D	1	
232	095537	4019SH0204	SHAFT ARM B	1	
233	095875	C-303	SPACER	2	
234	095878		3x15 PARALLEL PIN	1	
235	118706	4019RE0203C	PUSHER PLATE R	1	
236	095538	4019SH0205	SHAFT ARM C	1	
237	134033		170MXL W4.0 TIMING BELT	2	Changed from EDP#015519

Table 8-3: Pusher Mechanism Assembly Parts List (Continued)

No.	EDP No.	Mfg. Part No.	Description	Qty.	Remarks
238	118727	4019RO0201A	ROLLER C	2	
239	095543	4019SH0210	SHAFT GEAR B	1	
240	055413		2.6x6 PHILLIPS SELF TIGHT-ENING, BINDING	5	
241	110443		1.2x6 WAVE SPRING PIN	2	
242	132048	4019PT0202	IDLER ROLLER GUIDE	2	
243	132047	4019SH0212	IDLER SHAFT C	2	
244	126662	C-305	SPACER	2	
245	143496		1.2x12 PARALLEL PIN (Hard,B)	2	

DBV-30X Cash Box Assemblies

200 Note Cash Box Assembly Exploded View

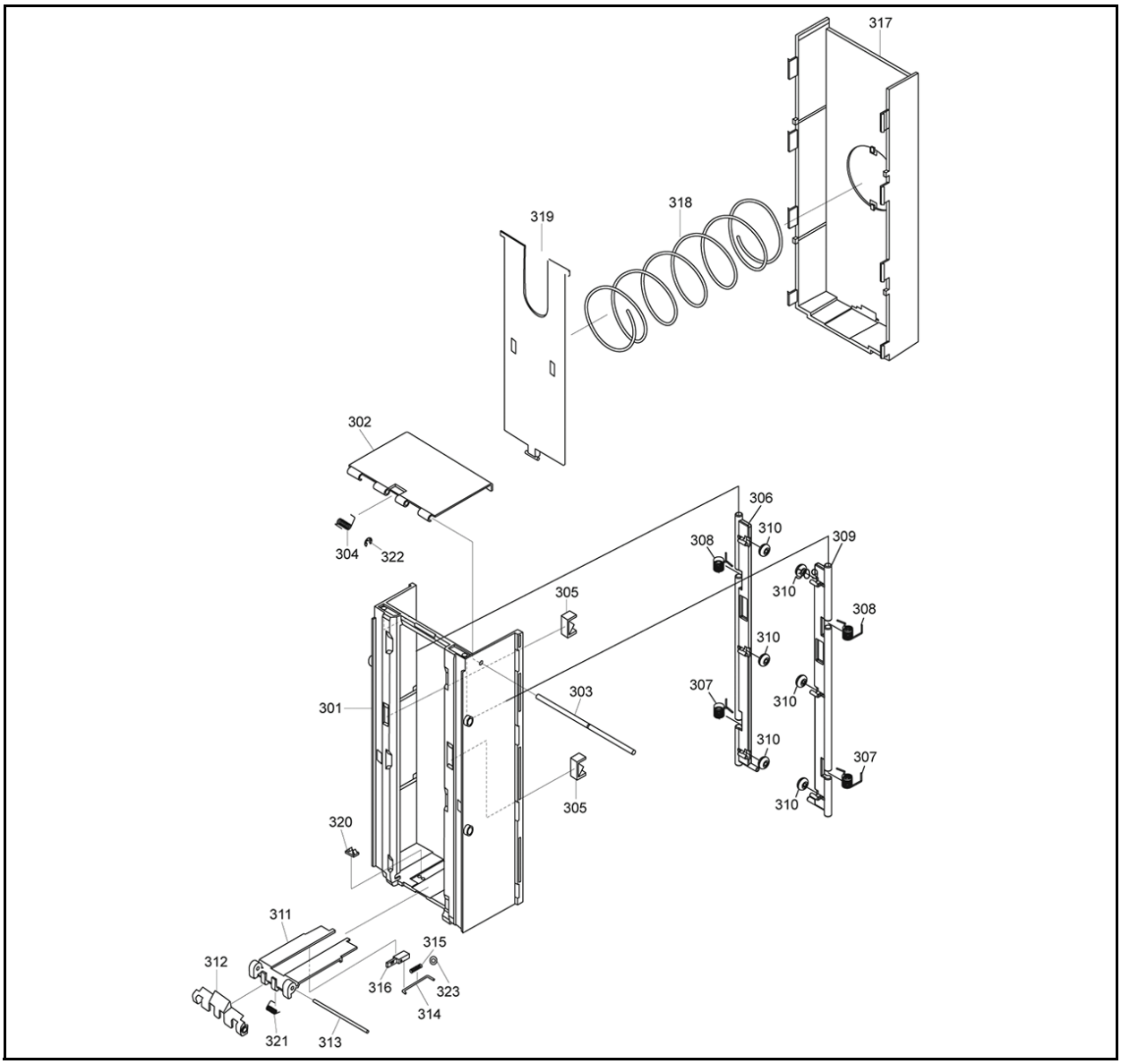

Figure 8-5 200 Note Cash Box Unit Exploded View

200 Note Cash Box Assembly Parts List

Table 8-4: 200 Note Cash Box Assembly Parts List

No.	EDP No.	Mfg. Part No.	Description	Qty.	Remarks
301	118716	4019RE0301E	CASH BOX FRAME A R	1	
302	118678	4019RE0304A	CASH BOX FRAME D R	1	
303	095547	4019SH0302A	CASH BOX FRAME SHAFT	1	
304	115145	4019KS0304	CASH BOX SPRING D	1	
305	118701	4019RE0311A	SENSOR GUIDE D R	2	
306	118680	4019RE0306A	BR GUIDE-L R	1	
307	115144	4019KS0303A	CASH BOX SPRING C	2	
308	115143	4019KS0302A	CASH BOX SPRING B	2	
309	118681	4019RE0307A	BR GUIDE-R R	1	
310	118780	4019RO0301A	ROLLER D R	6	
311	118720	4019RE0303B	CASH BOX FRAME C R	1	
312	118715	4019RE0309B	CASH BOX LEVER R	1	
313	095533	4019SH0104	ROLLER SHAFT C	1	
314	095546	4019SH0301	FG SHAFT	1	
315	061095	C-170	SPRING (NO.1035)	1	
316	118683	4019RE0308A	BF GUIDE R	1	
317	118703	4019RE0302B	CASH BOX FRAME B R	1	
318	107950	4019CS0301A	CASH BOX SPRING A	1	
319	118705	4019RE0305C	CASH BOX PLATE R	1	
320	118713	4019RE0310B	BF SENSOR GUIDE R	1	
321	102024	4019KS0305	CASH BOX LEVER SPRING	1	
322	003704		E-RING Ø1.5 SUSTAINER	1	
323	104872		2x4x0.3 FLAT WASHER	1	

300 Note Cash Box Assembly Exploded View

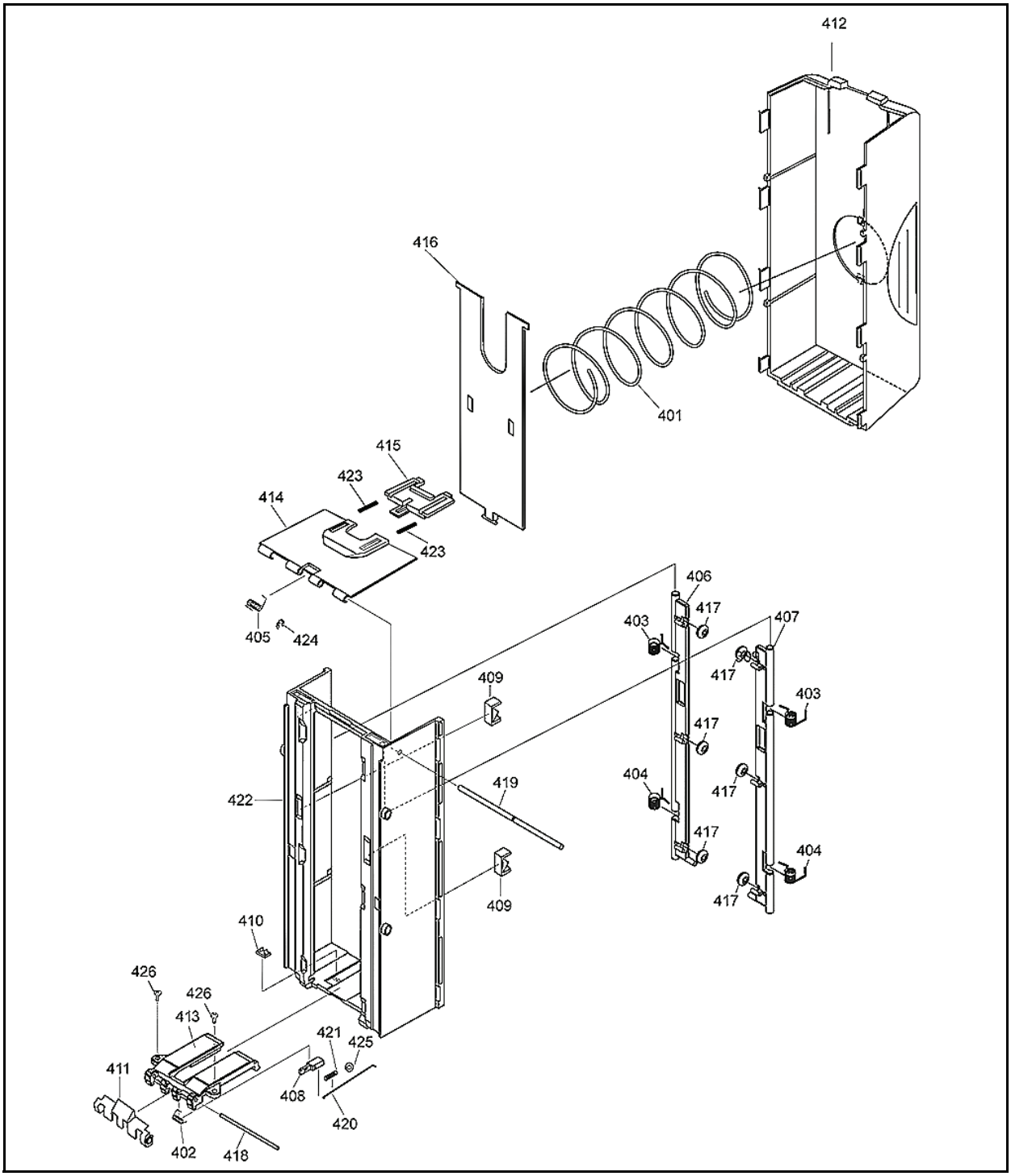

Figure 8-6 300 Note Cash Box Assembly Exploded View

300 Note Cash Box Assembly Parts List

Table 8-5: 300 Note Cash Box Assembly Parts List

No.	EDP No.	Mfg. Part No.	Description	Qty.	Remarks
401	107950	4019CS0301A	CASH BOX SPRING A	1	
402	102024	4019KS0305	CASH BOX LEVER SPRING	1	
403	115143	4019KS0302A	CASH BOX SPRING B	2	
404	115144	4019KS0303A	CASH BOX SPRING C	2	
405	115145	4019KS0304	CASH BOX SPRING D	1	
406	118680	4019RE0306A	BR GUIDE-L R	1	
407	118681	4019RE0307A	BR GUIDE-R R	1	
408	118683	4019RE0308A	BF GUIDE R	1	
409	118701	4019RE0311A	SENSOR GUIDE D R	2	
410	118713	4019RE0310B	BF SENSOR GUIDE R	1	
411	118715	4019RE0309B	CASH BOX LEVER R	1	
412	118291	4019RE0312A	300 NOTE CASH BOX FRAME B	1	
413	115006	4048RE0102A	1000 NOTE CASH BOX FRAME C	1	
414	118294	4019RE0313A	300 NOTE CASH BOX FRAME D R	1	
415	115008	4048RE0104	DOOR LOCK	1	
416	118705	4019RE0305C	CASH BOX PLATE R	1	
417	118780	4019RO0301A	ROLLER D R	6	
418	095533	4019SH0104	ROLLER SHAFT C	1	
419	095547	4019SH0302A	CASH BOX FRAME SHAFT	1	
420	117741	4019SH0303	300 NOTE CASH BOX FG SHAFT	1	
421	061095	C-170	SPRING (NO.1035)	1	
422	118716	4019RE0301E	CASH BOX FRAME A R	1	
423	095880	DC-097	SPRING (NO.1035)	2	
424	003704		E-RING Ø1.5 SUSTAINER	1	
425	104872		2x4.3x0.3 FLAT WASHER	1	
426	063250		2.6x6 BIND P TIGHT SCREW	2	

500 Note Cash Box Assembly Exploded View

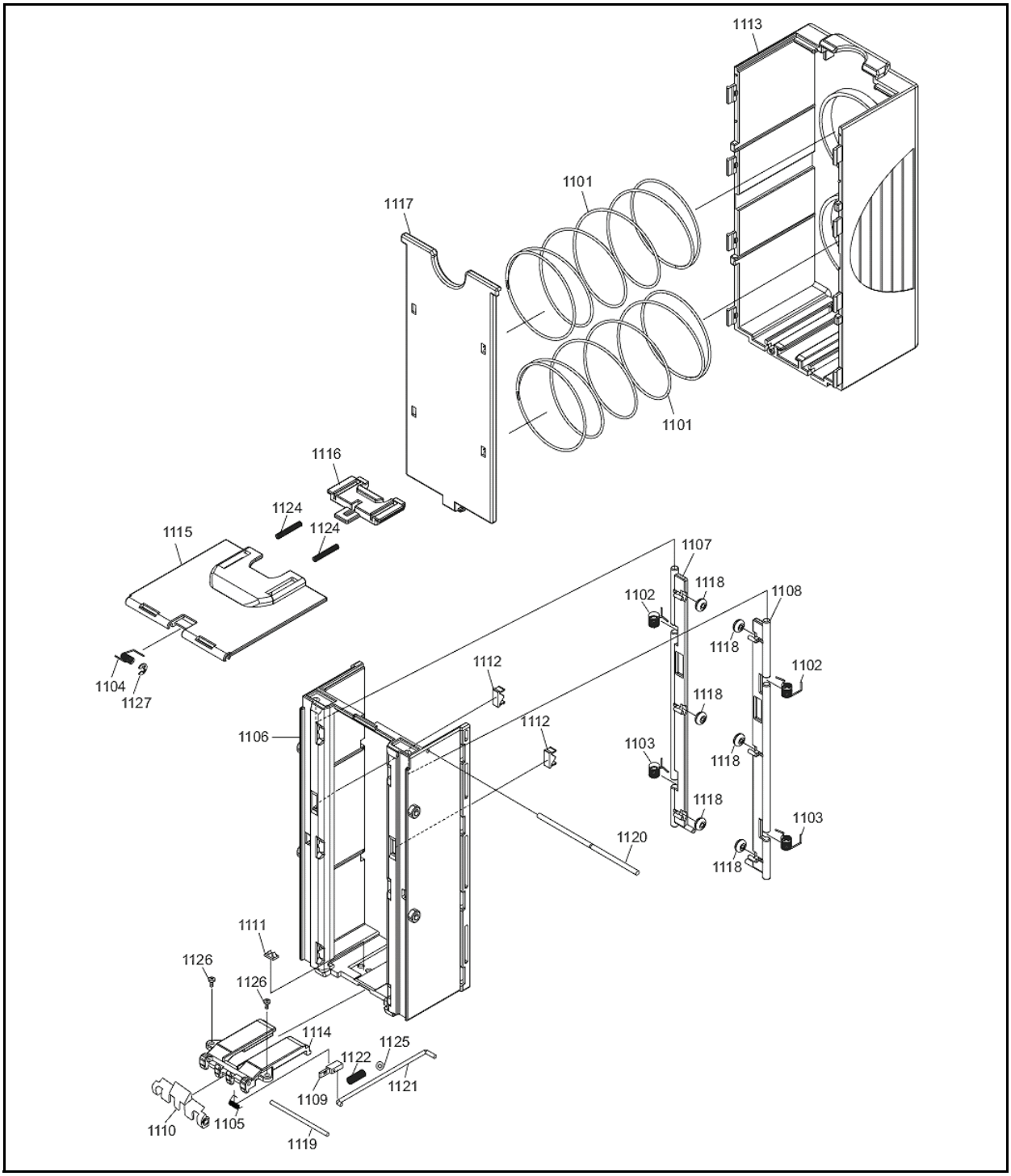

Figure 8-7 500 Note Cash Box Assembly Exploded View

500 Note Cash Box Assembly Parts List

Table 8-6: 500 Note Cash Box Assembly Parts List

No.	EDP No.	Mfg. Part No.	Description	Qty.	Remarks
1101	134055	4019CS0302	500 NOTE CASH BOX SPRING	2	
1102	115143	4019KS0302A	CASH BOX SPRING B	2	
1103	115144	4019KS0303A	CASH BOX SPRING C	2	
1104	115145	4019KS0304	CASH BOX SPRING D	1	
1105	102024	4019KS0305	CASH BOX LEVER SPRING	1	
1106	118716	4019RE0301E	CASH BOX FRAME A R	1	
1107	118680	4019RE0306A	BR GUIDE-L R	1	
1108	118681	4019RE0307A	BR GUIDE-R R	1	
1109	118683	4019RE0308A	BF GUIDE R	1	
1110	118715	4019RE0309B	CASH BOX LEVER	1	
1111	118713	4019RE0310B	BF SENSOR GUIDE R	1	
1112	118701	4019RE0311A	BF SENSOR GUIDE D R	1	
1113	134054	4019RE0314A	CASH BOX FRAME B	1	
1114	115006	4048RE0102A	1,000 NOTE CASH BOX FRAME C	1	
1115	115007	4048RE0103A	1,000 NOTE CASH BOX FRAME D R	1	
1116	115008	4048RE0104	DOOR LOCK	1	
1117	115009	4048RE0105B	1,000 NOTE CASH BOX PLATE	1	
1118	118780	4019RO0301A	ROLLER D	6	
1119	095533	4019SH0104	ROLLER SHAFT C	1	
1120	095547	4019SH0302A	CASH BOX FRAME SHAFT	1	
1121	134052	4048SH0304	CASH BOX FG SHAFT	1	
1122	061095	C-170	SPRING	1	
1124	095880	DC-097	SPRING	2	
1125	104872		2x4.3x0.3 FLAT WASHER	1	
1126	063250		2.6x6 PHILLIPS TIGHT BINDING	2	
1127	091518		E-RING Ø1.5 SUSTAINER	1	

1000 Note Cash Box Assembly Exploded View

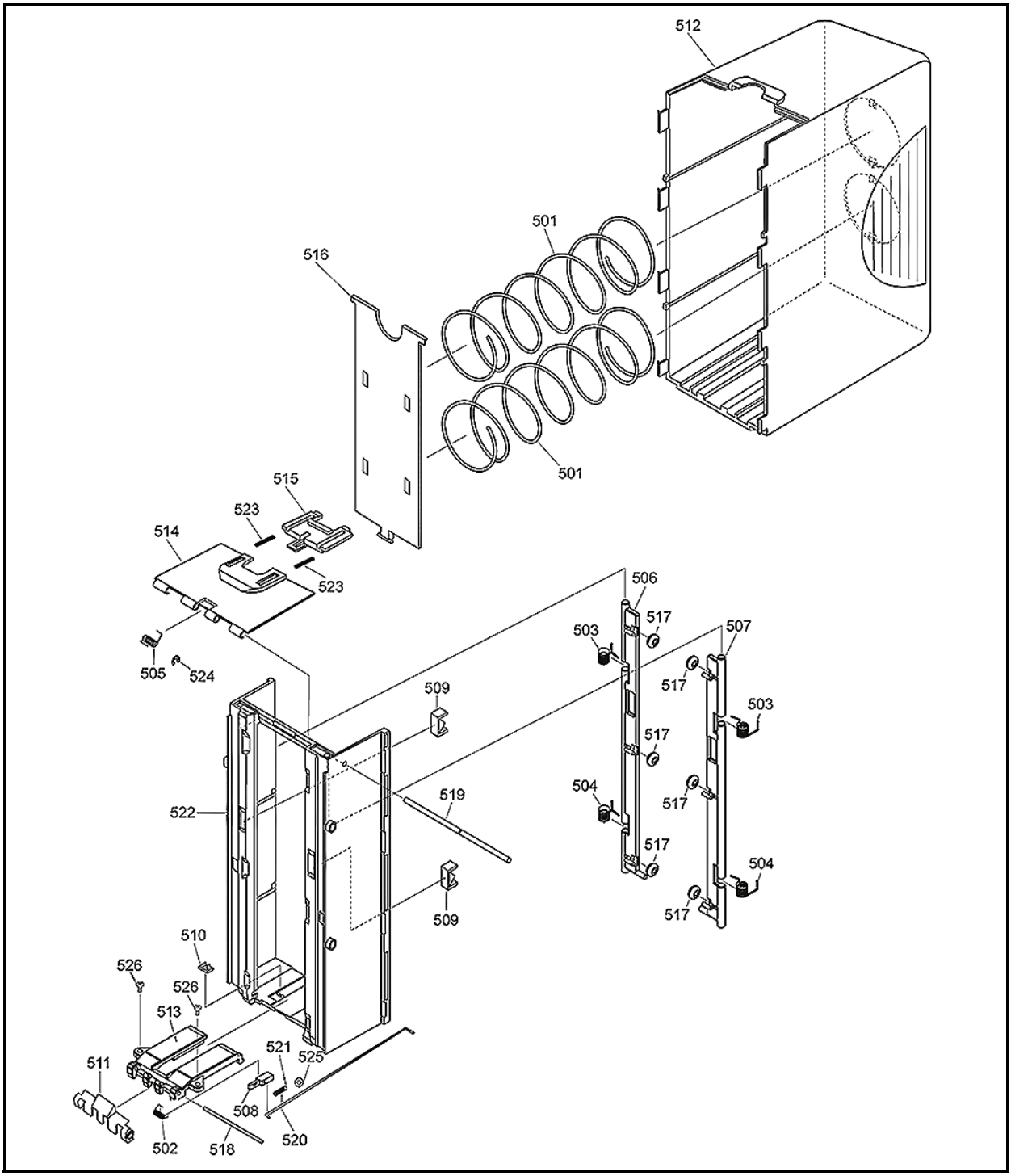

Figure 8-8 1000 Note Cash Box Assembly Exploded View

1000 Note Cash Box Assembly Parts List

Table 8-7: 1000 Note Cash Box Assembly Parts List

No.	EDP No.	Mfg. Part No.	Description	Qty.	Remarks
501	115059	4048CS0101	1,000 NOTE CASH BOX SPRING A	2	
502	102024	4019KS0305	CASH BOX LEVER SPRING	1	
503	115143	4019KS0302A	CASH BOX SPRING B	2	
504	115144	4019KS0303A	CASH BOX SPRING C	2	
505	115145	4019KS0304	CASH BOX SPRING D	1	
506	118680	4019RE0306A	BR GUIDE L R	1	
507	118681	4019RE0307A	BR GUIDE R R	1	
508	118683	4019RE0308A	BF GUIDE R	1	
509	118701	4019RE0311A	SENSOR GUIDE D R	2	
510	118713	4019RE0310B	BF SENSOR GUIDE R	1	
511	118715	4019RE0309B	CASH BOX LEVER R	1	
512	115005	4048RE0101C	1,000 NOTE CASH BOX FRAME B	1	
513	115006	4048RE0102A	1,000 NOTE CASH BOX FRAME C	1	
514	115007	4048RE0103A	1,000 NOTE CASH BOX FRAME D	1	
515	115008	4048RE0104	DOOR LOCK	1	
516	115009	4048RE0105A	1,000 NOTE CASH BOX PLATE	1	
517	118780	4019RO0301A	ROLLER D R	6	
518	095533	4019SH0104	ROLLER SHAFT C	1	
519	095547	4019SH0302A	CASH BOX FRAME SHAFT	1	
520	115141	4048SH0101	1,000 NOTE CASH BOX FG SHAFT	1	
521	061095	C-170	SPRING	1	
522	118716	4019RE0301E	CASH BOX FRAME A R	2	
523	095880	DC-097	SPRING	1	
524	003704		E-RING Ø1.5 SUSTAINER	2	
525	104872		2x4.3x0.3 WASHER	2	
526	063250		2.6x6 BIND P TIGHT SCREW	2	

SD Module Assembly

SD Module Assembly Exploded View

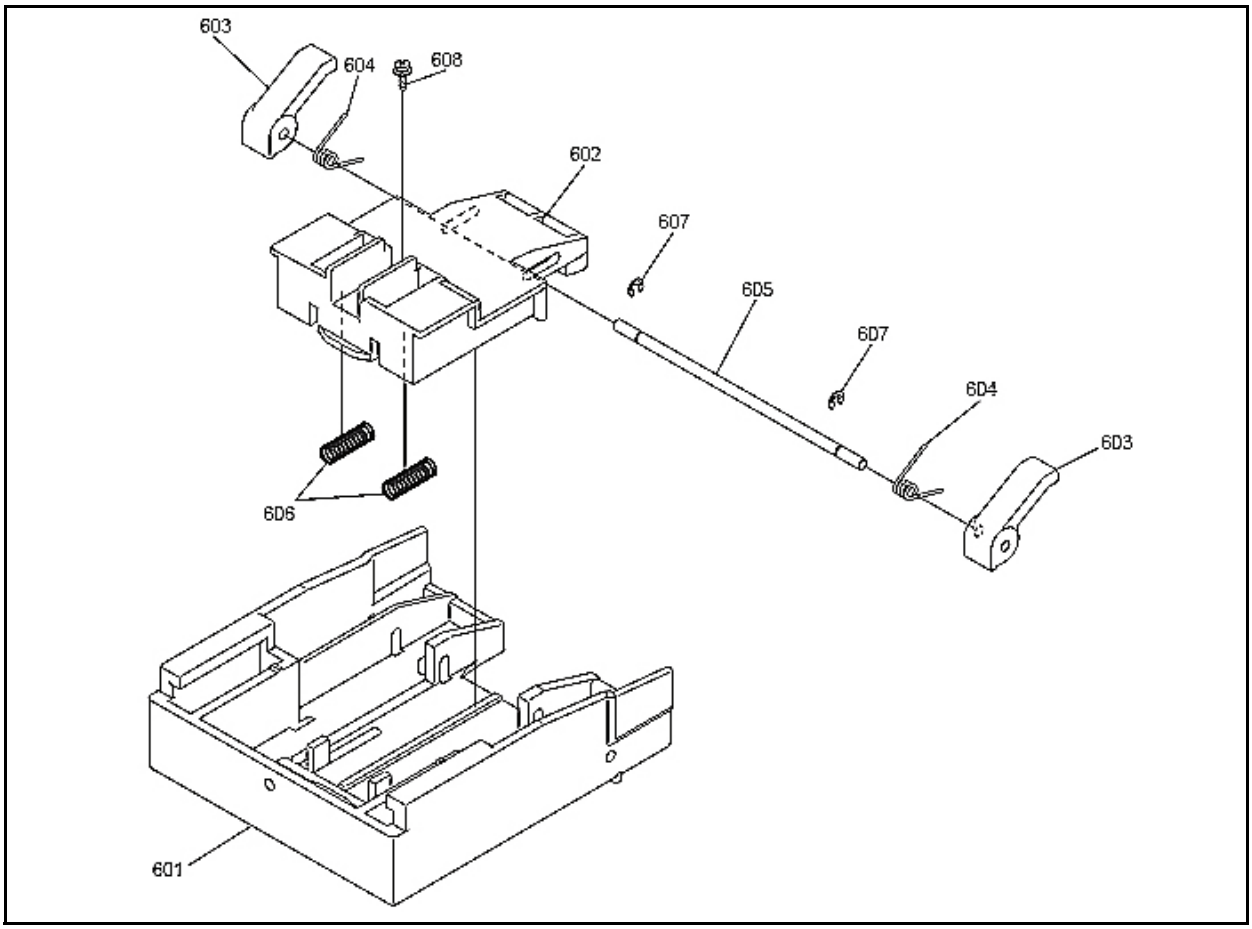

Figure 8-9 SD Module Assembly Exploded View

SD Module Assembly Parts List

Table 8-8: SD Module Assembly Parts List

No.	EDP No.	Mfg. Part No.	Description	Qty.	Remarks
601	116943	4047RE0101A	SD STOPPER GUIDE	1	
602	129241	4047RE0102C	SD CASH BOX STOPPER	1	
603	116945	4047RE0103	SD STOPPER LEVER	2	
604	120459	4047KS0101	SD LEVER SPRING	2	
605	120677	4047SH0101	SD LEVER SHAFT	1	
606	120447	C152	PRESSURE SPRING (N0. 1053)	2	
607	003705		E-RING Ø2 SUSTAINER	2	
608	125266		2.6x5 WASHER HEAD B TYPE SCREW	1	

Snack Mask Assembly

Snack Mask Assembly Exploded View

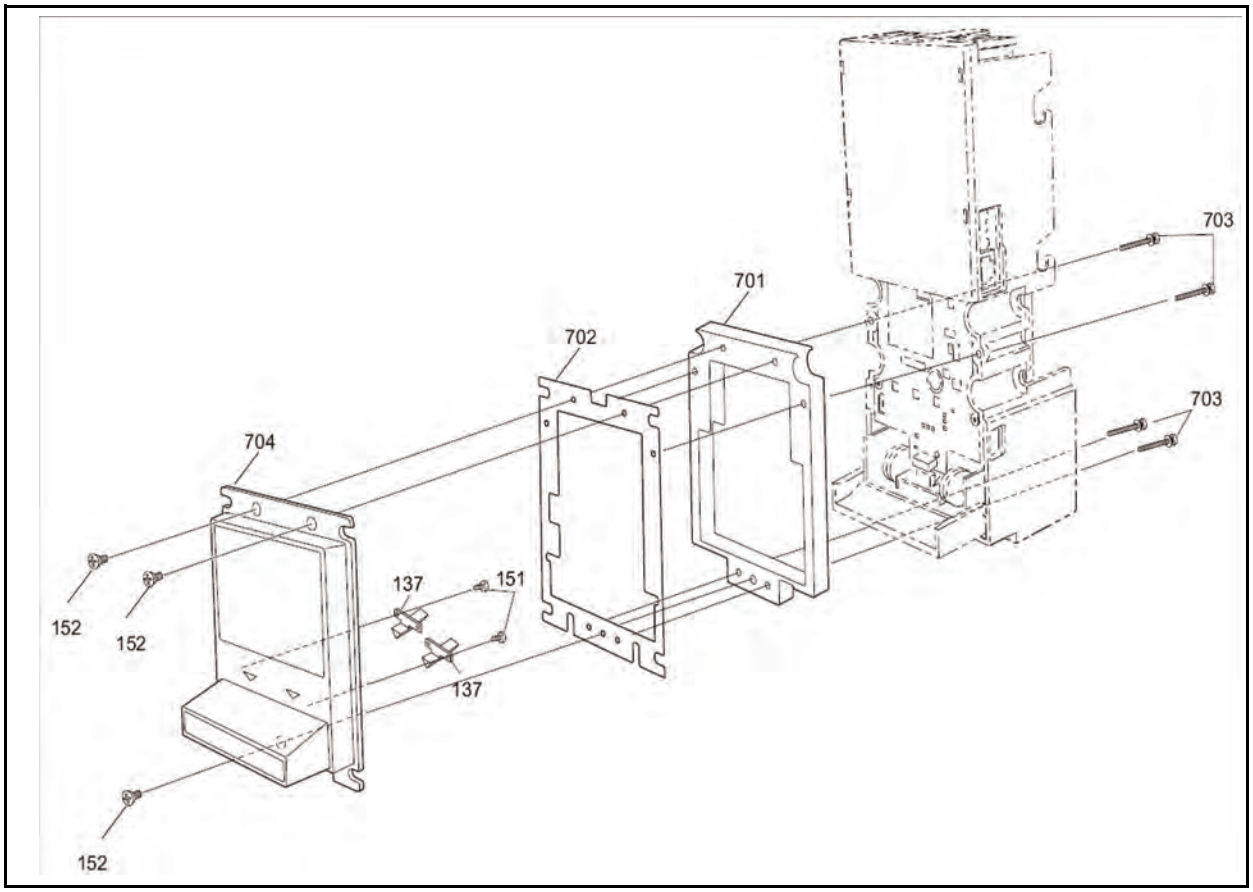

Figure 8-10 Snack Mask Assembly Exploded View

Snack Mask Unit Parts List

Table 8-9: Snack Mask Assembly Parts List

No.	EDP No.	Mfg. Part No.	Description	Qty.	Remarks
701	120985	4019RE0701	WINDOW SPACER	1	
702	109931	4019PT0401C	FP BRACKET R	1	
703	004006		M3x25 WASHER SEMS	4	
704	120986	4019RE0702	WINDOW BEZEL	1	

Lock Module Assembly

Lock Module Assembly Exploded View

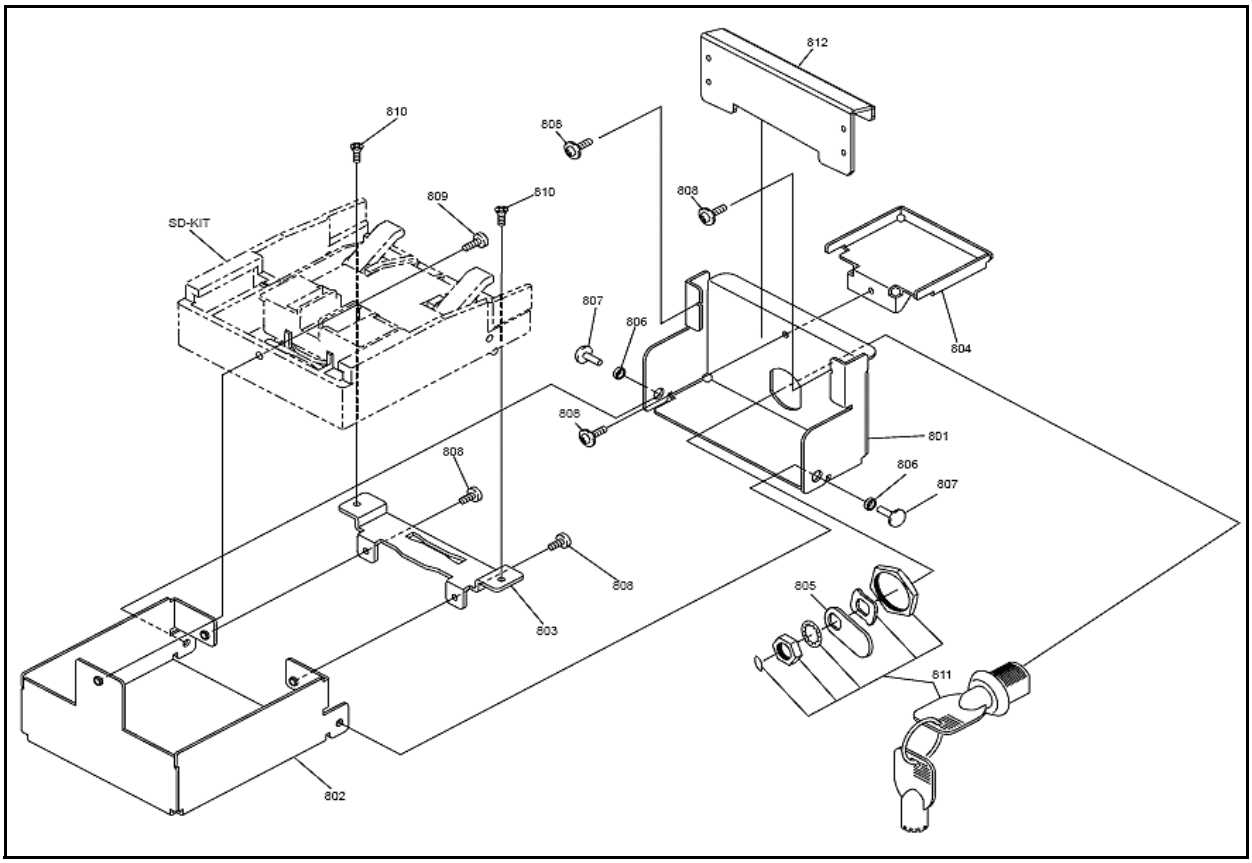

Figure 8-11 Lock Module Assembly Exploded View

Lock Module Lock Module Assembly Parts List

Table 8-10: Lock Module Assembly Parts List

No.	EDP No.	Mfg. Part No.	Description	Qty.	Remarks
801	121398	4047PT0201A	FRAME LOCK A	1	
802	121399	4047PT0202	FRAME LOCK B	1	
803	121400	4047PT0203	FRAME LOCK C	1	
804	121401	4047PT0204	FRAME LOCK D	1	For 1000 Note Cash Box only.
805	121402	4047PT0205	LOCK PLATE	1	
806	121403	4047CO0201	LOCK FRAME COLLAR	2	
807	040464	AD-42	BLIND RIVIT TYPE SHIELD	2	
808	003598		2.6x6 SEMS SCREW	5	
809	049261		2.6x8 SEMS WASHER SCREW	1	
810	028607		2.6x6M PLATE SCREW	2	
811	032057	C-88-1	COIN LOCK COMPONENTS	1	
812	124155	4047PT0206	FRAME E LOCK (TANG) R	1	For 200 Note Cash Box only.

Euro SD-Type Faceplate Lock Module Assembly

Euro SD-Type Faceplate Lock Module Assembly Exploded View

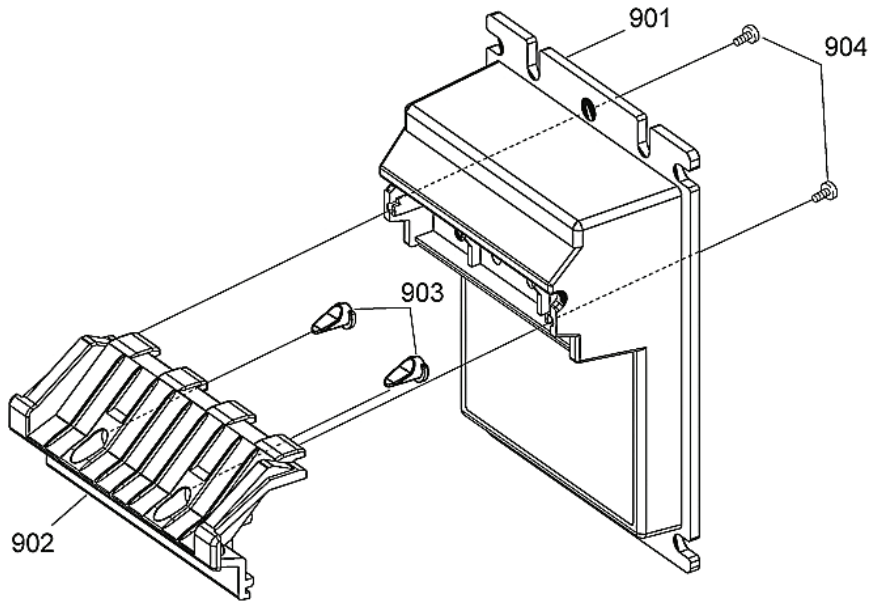

Figure 8-12 Euro SD-Type Faceplate Assembly Exploded View

Euro SD Type Faceplate Parts List

Table 8-11: Euro SD-Type Faceplate Assembly Parts List

No.	EDP No.	Mfg. Part No.	Description	Qty.	Remarks
901	132830	4047RE0104	EURO SD TYPE 1 FACEPLATE	1	For DBV-30X-SD EUR & RMB only.
902	132831	4047RE0105	EURO SD TYPY 2 FACEPLATE	1	For DBV-30X-SD EUR & RMB only.
903	132832	4047RE0106	EURO SD TYPE FACEPLATE PRISM	2	For DBV-30X-SD EUR & RMB only.
904	055413		2.6x6 BIND P TIGHT SCREW	2	

Waterproofing Kit Assembly

Waterproofing Kit Assembly Exploded View

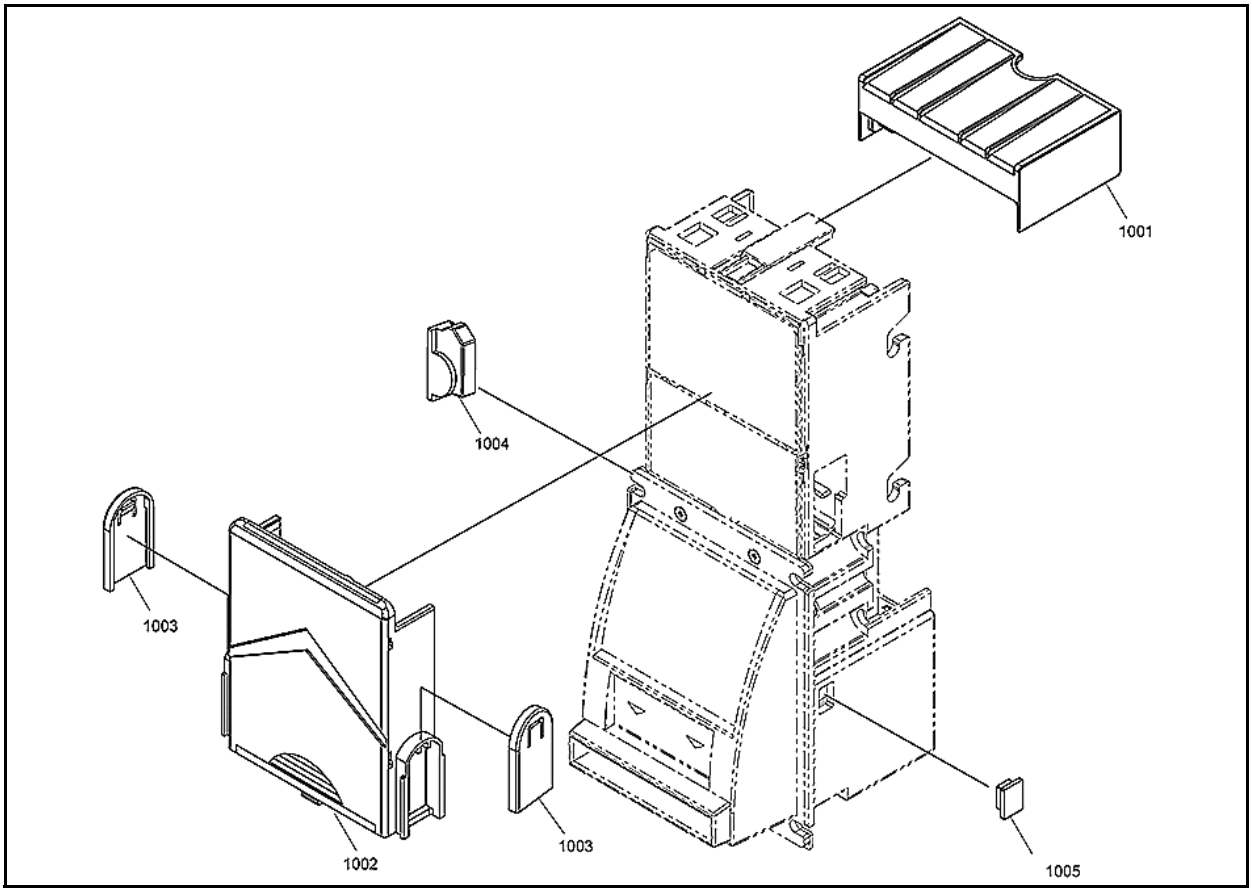

Figure 8-13 Waterproofing Kit Assembly Exploded View

Waterproofing Kit Assembly Parts List

Table 8-12: Waterproofing Kit Assembly Parts List

No.	EDP No.	Mfg. Part No.	Description	Qty.	Remarks
1001	132767	4019RE0417	WATERRPROOFING MODULE TOP COVER	1	
1002	132768	4019RE0418	WATERRPROOFING MODULE BASE COVER	1	
1003	132769	4019RE0419	WATERRPROOFING MODULE SIDE COVER	2	
1004	132770	4019RE0420	WATERRPROOFING MODULE GASKET #1	1	
1005	132771	4019RE0421	WATERRPROOFING MODULE GASKET #2	1	

DBV-30X-SU Type 2 Bezel Kit Assembly

DBV-30X-SU Type 2 Bezel Kit Assembly Exploded View

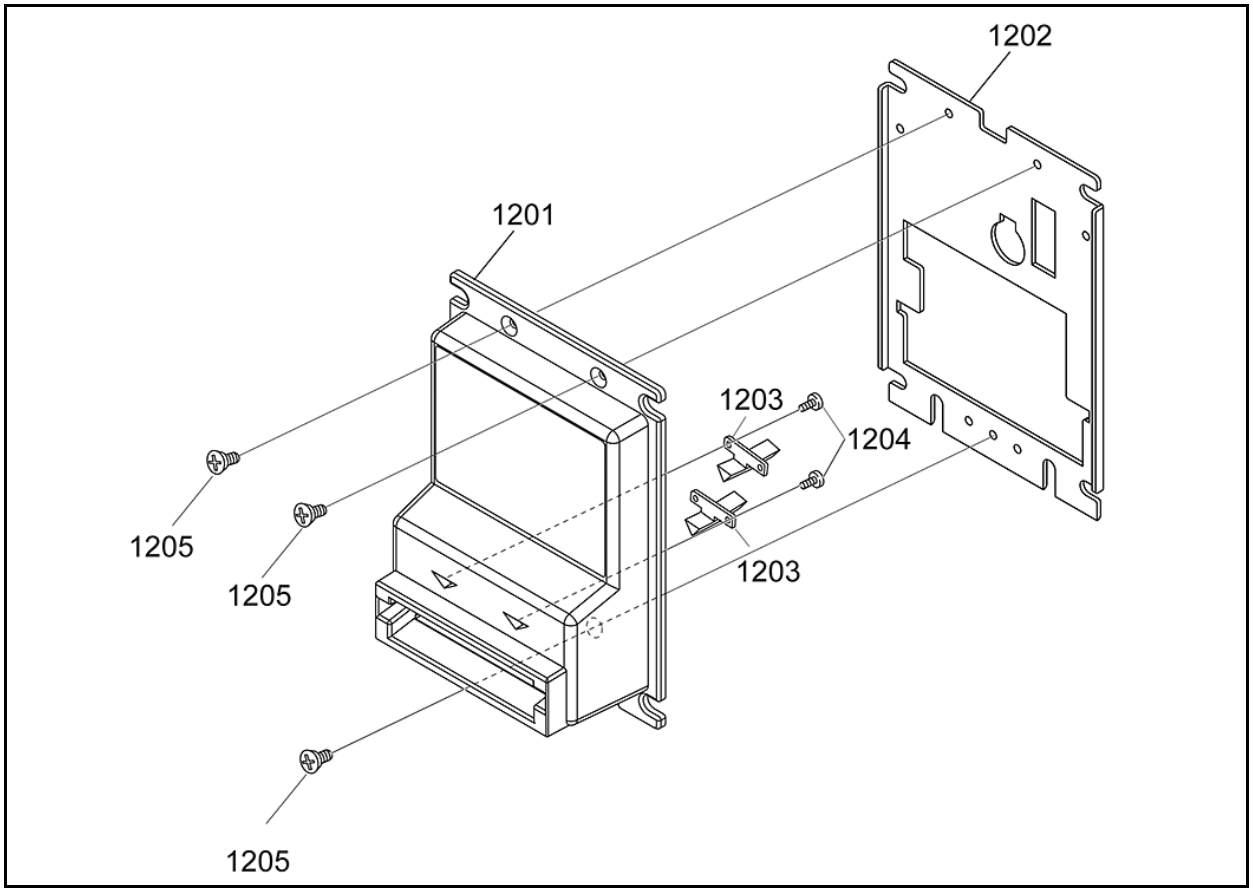

Figure 8-14 DBV-30X-SU Type 2 Bezel Kit Assembly Exploded View

DBV-30X-SU Type 2 Bezel Kit Assembly Parts List

Table 8-13: DBV-30X-SU Type 2 Bezel Kit Assembly Parts List

No.	EDP No.	Mfg. Part No.	Description	Qty.	Remarks
1201	187354	4019RE0422	ICT TYPE BEZEL	1	
1202	109931	4019PT0401C	FP BRACKET R	1	
1203	120444	4019RE0416	E-F.P LED GUIDE	2	
1204	055413		2.6x6 BIND P TIGHT SCREW	2	
1205	005332		3X5 Flat Head Bis CM	3	

DBV-30X Euro Bezel Kit Assembly

DBV-30X Euro Bezel Kit Assembly Exploded View

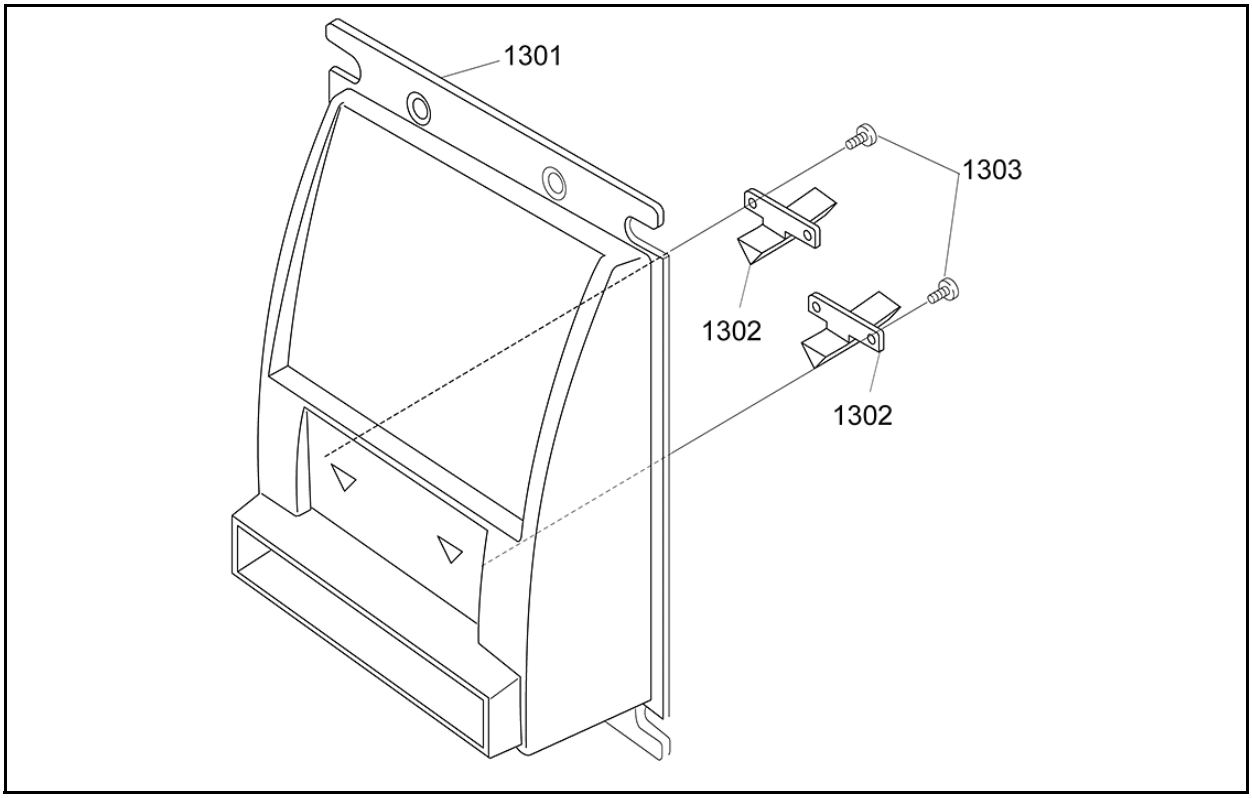

Figure 8-15 DBV-30X Euro Bezel Kit Assembly Exploded View

DBV-30X Euro Bezel Kit Assembly Parts List

Table 8-14: DBV-30X Euro Bezel Kit Assembly Parts List

No.	EDP No.	Mfg. Part No.	Description	Qty.	Remarks
1301	118684	4019RE0401A	BEZEL R	1	
1302	118686	4019RE0402	LED GUIDE R	2	
1303	005413		2.6x6 BIND P TIGHT SCREW	2	

THIS PAGE INTENTIONALLY LEFT BLANK

Optipay® BV
DBV-30X Bill Validator
Section 9

9 INDEX

S

T

U

W

Optipay® BV
DBV-30X Bill Validator
Appendix A

A TROUBLESHOOTING

This section provides the Troubleshooting procedures for the Optipay® DBV-30X Bill Validator. The information within contains the following features:

- DBV-30X-SU Troubleshooting
- Error and Reject Code Tables
- Diagnostics
- Sensors, Circuit Boards and Motor Location Diagram.

Introduction

Most failures within the Bill Validator occur due to minor causes. It is important to check that the internal connectors are properly mated and that the harness is also firmly connected before replacing parts.

Poor bill acceptance is often due to iron dust content that adheres to the magnetic head or to the magnetic head roller. Therefore, the Bill Validator should always be cleaned first.

To determine the cause of a failure, it is important to observe the operating state of the Bill Validator when power is first applied. This condition also allows the cause of a failure to be determined using the test mode.

When the Bill Validator head has been disassembled for repair, or when the Sensor board has been replaced, the Sensor should be readjusted.
All repairs should be performed by referring to the adjustment procedure, the wiring diagrams and the various disassembly procedures.

Failure Classifications

The cause of a failure can be broadly classified into the following four failure conditions. Check for the following operating fault states:

1. Test mode fails (See Figure A-1 and 2).
2. Incorrect initial operation (See Figure A-3).
3. Rejected or poorly accepts bills (See Figure A-4).
4. Improper bill transfer (See Figure A-5).

Test Mode Entry Failure Flowchart

The Figure A-1 and A-2 Flowcharts diagram the failure conditions related to entering test correctly.

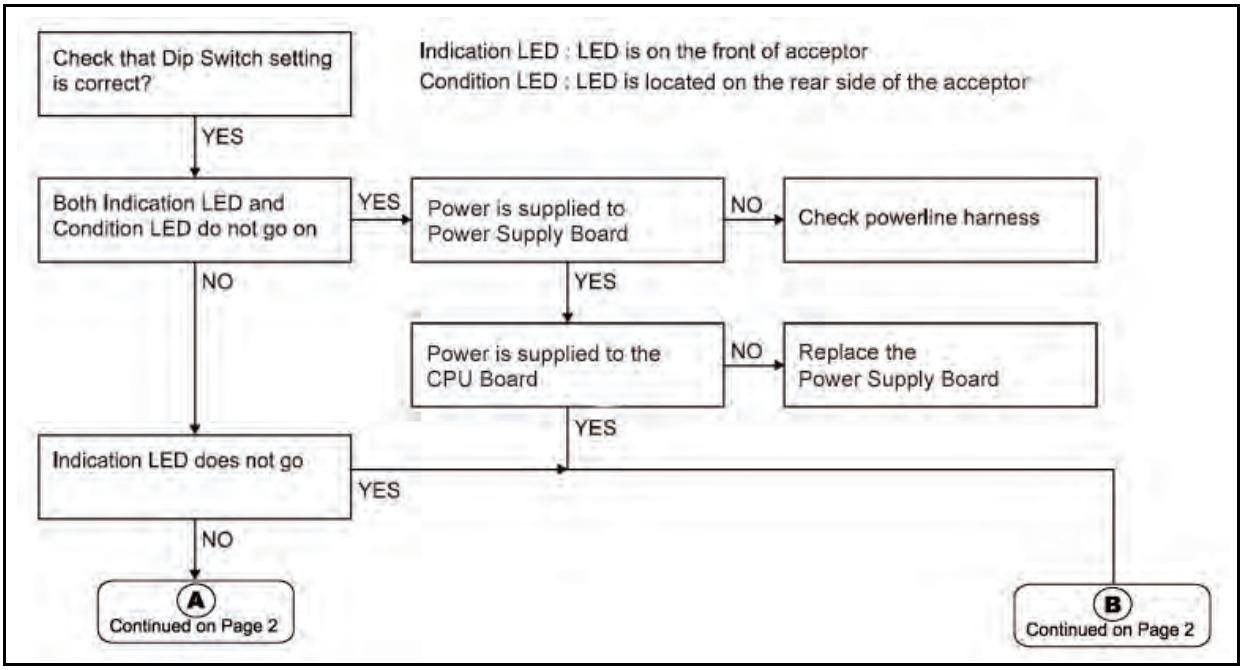

Figure A-1 DBV-30X Bill Validator Test Mode Failure Flow Chart Diagram (Part 1)

Test Mode Entry Failure Flowchart (Continued)

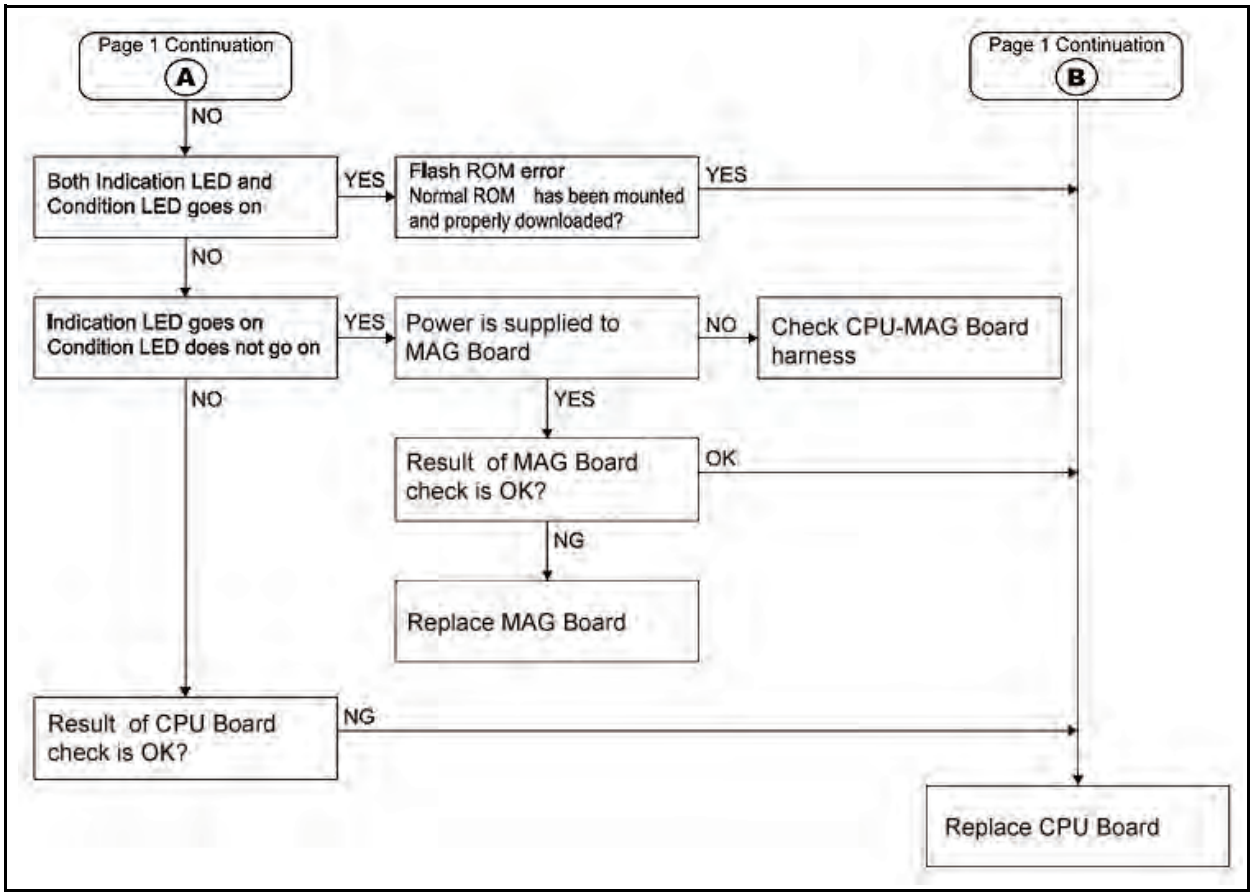

Figure A-2 DBV-30X Bill Validator Test Mode Failure Flow Chart Diagram (Part 2)

Incorrect Initial Operation Flowchart

The Figure A-3 Flowchart diagrams the LED indications available when an incorrect initial operational fault occurs.

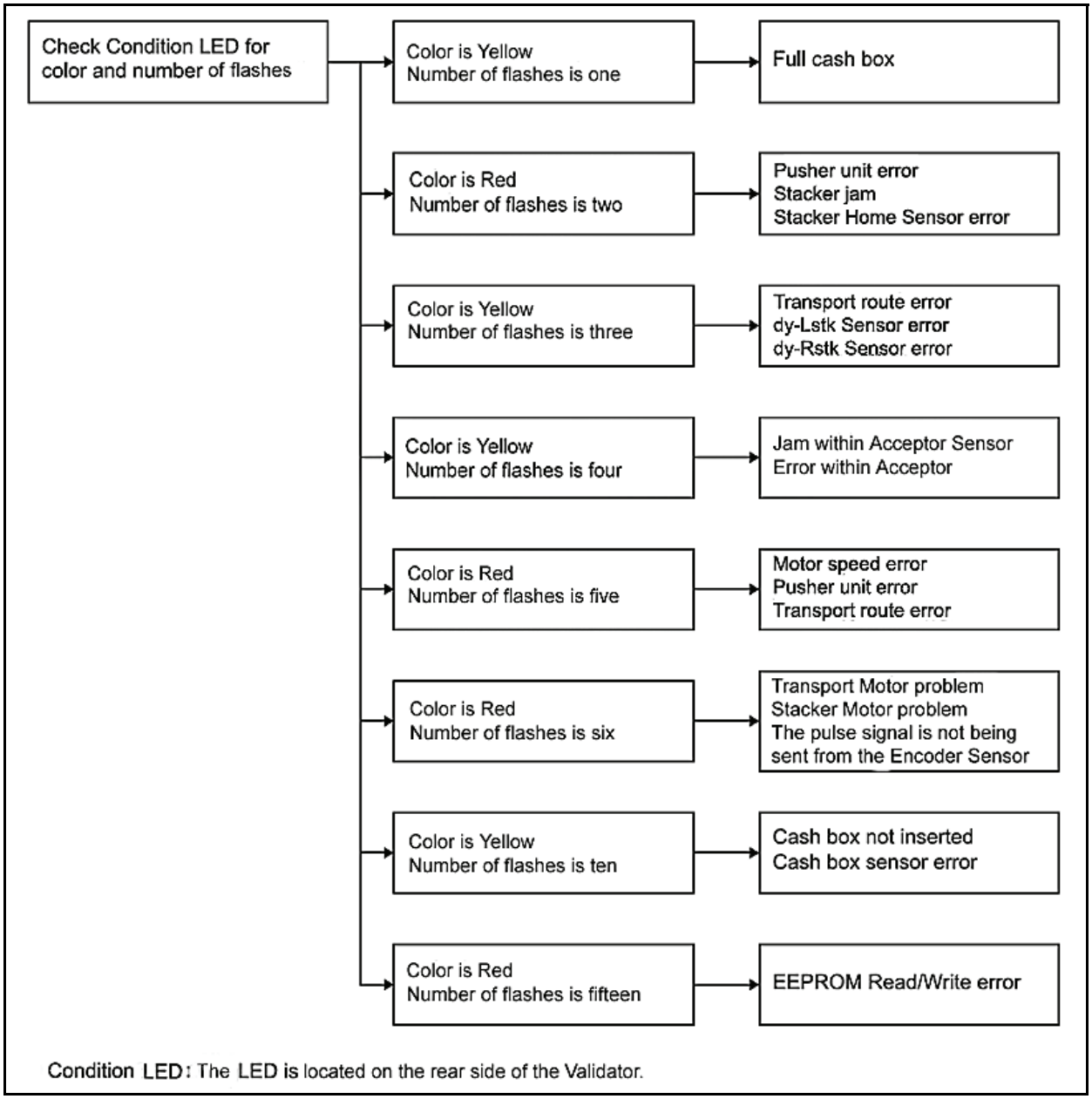

Figure A-3 DBV-30X Bill Validator Incorrect Initial Operation Flow Chart Diagram

Rejected or Poorly Accepted Bills Flowchart

The Figure A-4 Flowchart diagrams the fault conditions related to Bill Validator rejects or poorly accepts bills.

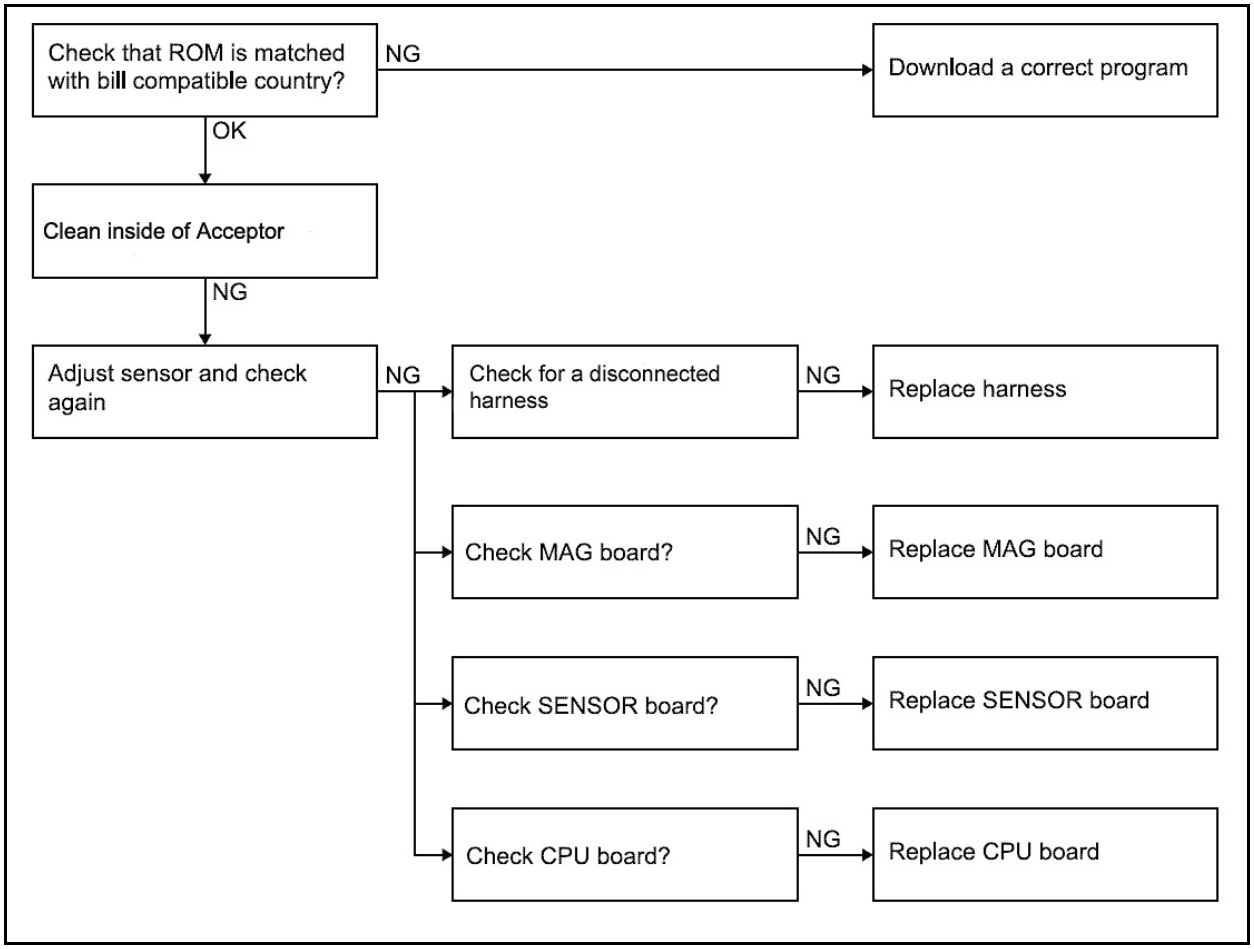

Figure A-4 DBV-30X Bill Validator Rejects or Poorly Accepts Bills Flow Chart Diagram

Improper Bill Transfer Flowchart

The Figure A-5 Flowchart diagrams the fault conditions related to Improper bill transfers.

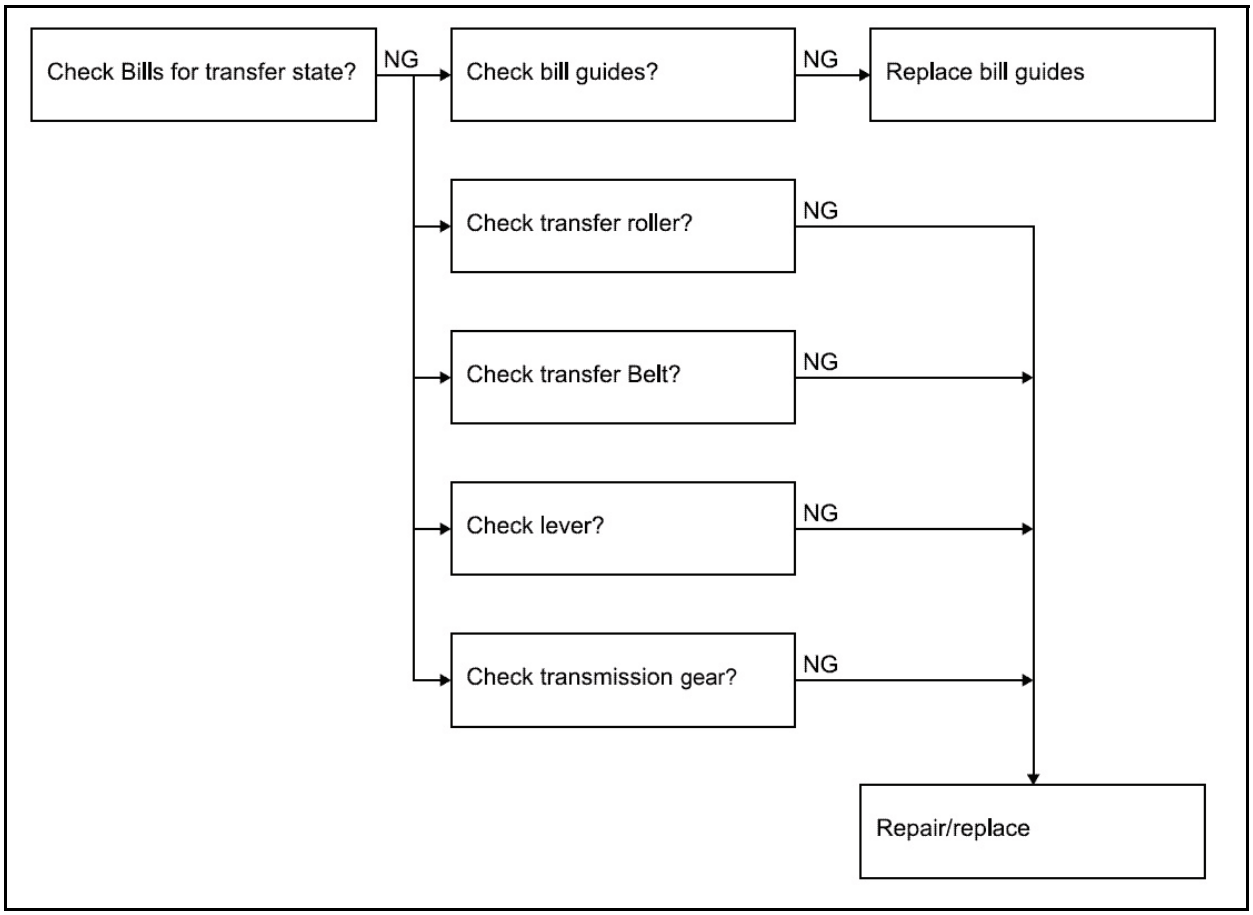

Figure A-5 DBV-30X Bill Validator Improper Bill Transfer Flow Chart Diagram

Error and Reject Code Tables

This section explains the meaning of the lit and flashing LED error and reject codes that can occur. See Table A-1 and Table A-2 for the Condition LED's Color, the number of blinks and their related meanings. When an error and rejection simultaneously occur, check the Table A-2 Condition LED's Color and count the number of blinks to detect the error and determine its cause.

Table A-1 Error Codes

Condition LED Blink No.			Error Description	Solution
R	Y	G		
	1		Stacker Full	Cash Box is full. Remove the Cash Box and empty the collected bills. Refer to "Retrieving Banknotes" on page 1-11 of Section 1.
2			Stacker JAM	Remove the Jammed bill. Refer to "Clearing a Bill Jam" on page 2-17 of Section 2.
3			Acceptor JAM (When the recycler is operating)	
	4		Acceptor JAM	
5			Feed Motor Speed Error	Perform the related diagnostic test located in the Diagnostics section of this Appendix.
6			Feed Motor Lock	
	7		Instruction waiting from host when the bill is in escrow	
8			Reserved	
	9		Continuous Insertion Protect Lever JAM	Remove the Jammed bill. Refer to "Clearing a Bill Jam" on page 2-17 of Section 2.
	10		Box not seated properly	Reset the Cash Box properly into position. If this does not resolve the problem, perform the related diagnostic test in the Diagnostics Section of this Appendix.
	11		Box Sensor Error	
	12		Cheating Detected	Cheating has occurred. When error is reset, remove and reinstall the Cash Box.
	13		Lower Guide is not locked in position	Properly lock the Lower Guide into position.
14			Reserved	
15			EEPROM Read Error	An EEPROM Read Error has occurred. When error resets, remove and reinstall the Cash Box. If this does not resolve the problem, contact your JCM technical service representative.

Table A-2 Reject Codes

Condition LED Blink No.			Possible Cause	Cause and Solution
R	Y	G		
		1	Insertion Error	Reinsert the bill correctly (Straight edge flat).
		2	Magnetic Error	Check MAG Sensor for dirt or iron accumulation. Clean the Sensor and rollers. To clean the Sensors and Rollers refer to "Preventive Maintenance" on page 2-17 of Section 2. Check all harnesses and connectors. A MAG Board failure may have occurred. Change the MAG Board if required. Refer to "MAG Circuit Board Removal" on page 4-7 of Section 4.

Table A-2 Reject Codes (Continued)

Condition LED Blink No.			Possible Cause	Cause and Solution
R	Y	G		
		3	Paper detected inside Acceptor at standby	Open the Acceptor and remove the paper and clean the lenses. refer to “Preventive Maintenance” on page 2-17 of Section 2. Check all harnesses and connectors. A Sensor and/or MAG Boards failure may have occurred. To change a Sensor refer to the Preventive Maintenance Section to locate the suspect Sensor and refer to “MAG Circuit Board Removal” on page 4-7 of Section 4 to replace a MAG Board.
		4	Adjustment/ Magnification Error	
		5	Transportation Error	Reinsert the bill correctly (Straight edge flat). Reset the Lower Guide into proper position. Check all lenses for dirt or scratches. To clean the Sensors refer to “Preventive Maintenance” on page 2-17 of Section 2. Check all harnesses and connectors. A Sensor and/or CPU Board failure may have occurred. To change a Sensor refer to the Preventive Maintenance Section to locate the suspect Sensor and refer to “Removing the CPU and Power Supply Boards” on page 4-1 of Section 4 to replace a CPU Board.
		6	Denomination Distinction Error	Remove the bill from the Acceptor clean the lenses. To clean the lenses refer to “Preventive Maintenance” on page 2-17 of Section 2. Check all harnesses and connectors. A Sensor and/or MAG Boards failure may have occurred. To change a Sensor refer to the Preventive Maintenance Section to locate the suspect Sensor and refer to “MAG Circuit Board Removal” on page 4-7 of Section 4 to replace a MAG Board.
		7	Photo Pattern Error (1)	
		8	Photo Level Error	
		9	Inhibited Bill	Check and reset the related DIP Switch to the value selection desired. Refer to “DIP Switch Settings” on page 2-14 of Section 2.
		10	Return instruction issued from the Host Machine	Check if the return instruction actually came from outside the installed Optipay system.
		11	Exit Sensor Error	Check for any foreign object around or blocking the exit Sensor. To clean the Sensor refer to “Preventive Maintenance” on page 2-17 of Section 2. A MAG and/or CPU board failure may have occurred. Change the MAG and/or CPU board if required. Refer to “MAG Circuit Board Removal” on page 4-7 and/or “Removing the CPU and Power Supply Boards” on page 4-1 of Section 4.
		12	Escrow Position Error	Check for any dents or nicks on the belts and rollers. Clean the belts and rollers. To clean the belts and rollers refer to “Preventive Maintenance” on page 2-17 of Section 2. Check that the Input power voltage is at the specified voltage rating. Change the CPU and/or Power Supply board if required. Refer to “Removing the CPU and Power Supply Boards” on page 4-1 of Section 4.
		13	Bill Length Error	Check all belts and rollers in the transport path. To clean the belts and rollers refer to “Preventive Maintenance” on page 2-17 of Section 2. To change the belts and rollers, refer to “Timing Belt Removals” on page 4-2 of Section 4.
		14	Photo Pattern Error (2)	Remove the offending bill from the Acceptor and clean the lenses. To clean the lenses refer to “Preventive Maintenance” on page 2-17 of Section 2. A Sensor and/or MAG Board failure may have occurred. To change a Sensor refer to the Preventive Maintenance Section to locate the suspect Sensor and refer to “MAG Circuit Board Removal” on page 4-7 of Section 4 to replace a MAG Board.
		15	Incompatible Bill Error	

Diagnostics

The DBV-30X series is equipped with diagnostic features to aid in repair and maintenance. This section describes the test procedure for each function using DIP Switch settings to identify the cause of a failure condition. To identify the cause of a failure condition, the DBV-30X needs to be placed into the Test mode.

Entering the Test Mode

To enter the test mode perform the following steps:

1. Set DIP Switch SW1-8 to ON and DIP Switches SW1-1 through SW1-7 to OFF then
2. Supply power to the DBV-30X.
3. The Indication LED located on the Faceplate will begin blinking and the Condition LEDs (Green, Yellow and Red) located on the rear of the unit will light. This condition indicates that the unit is in the Test mode.
4. Set DIP Switches SW1-1 through SW1-7 according to the test you wish to execute.
5. Set the DIP Switch SW1-8 to OFF to begin a test. When the test starts, the Indication LEDs turn OFF and the Green, Yellow and Red Condition LEDs also turn OFF. After few seconds, the Condition LEDs will turn ON, BLINK or OFF depending on the condition being executed.
6. To finish a test, set the DIP Switch SW1-8 to ON. When the test finishes, the Indication LED blinks and the Green, Yellow and Red Condition LEDs all extinguish (turn OFF).

Feed Motor Forward/Reverse Rotation Test

This test detects the forward/reverse feed motor speed rotation. Confirm that the feed motor operates smoothly without abnormal noise. Set DIP Switches SW1-1 through SW1-7 according to those indicated in Table A-3.

Table A-3 Feed Motor Rotation Test Errors

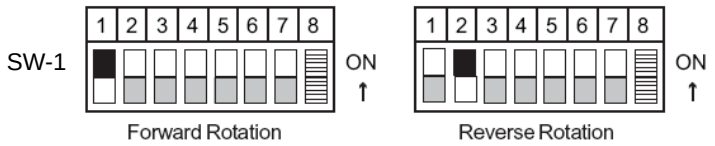

Condition LED Blink No.			Motor Condition	Cause and Solution
R	Y	G		
1	1	1	Normal	None
2	2	2	Fast	Contact your JCM Technical Support Representative.
3	3	3	Slow	A Power Supply Board failure may have occurred. Refer to “Removing the CPU and Power Supply Boards” on page 4-1 of Section 4.
6	6	6	Abnormal	The Feed Motor Encoder Sensor does not detect motor rotation. Check all harnesses and connectors. A CPU board failure may have occurred. Change the CPU Board. Refer to “Removing the CPU and Power Supply Boards” on page 4-1 of Section 4.

Stacker Test

This test detects the Stacker’s operational condition. When the test starts, the pushing mechanism begins working constantly. No LEDs lit indicates the stacker is working properly. If the Red and Yellow LEDs light, refer to the Stacker Test Error Codes listed in Table A-4 to obtain a description of the error.

Table A-4 Stacker Test Errors

SW-1 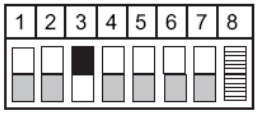

Condition LED Blink No.			Stacker Condition	Cause and Solution
R	Y	G		
	1		Stacker Full	Check/Empty the Cash Box. Check all harnesses and connectors. A MAG/CPU board failure may have occurred. Change the MAG and/or CPU board if required. Refer to “MAG Circuit Board Removal” on page 4-7 and/or “Removing the CPU and Power Supply Boards” on page 4-1 of Section 4.
2			Stacker Jam/ Locked	Check all harnesses and connectors. A CPU and/or Small Feed Board failure may have occurred. Change the CPU/Small Feed Board if required. Refer to “Removing the CPU and Power Supply Boards” on page 4-1 and/or “Removing the Small Feed Sensor Boards” on page 4-6 of Section 4. The Stacker Motor may be defective. Change the motor if required. Refer to “Removing the Drive and Stacking Motors” on page 4-3 of Section 4.
	10		Cash Box Not Set	Reseat the Cash Box into proper position.Check all harnesses and connectors. A MAG/CPU board failure may have occurred. Change the MAG and/or CPU board if required. Refer to “MAG Circuit Board Removal” on page 4-7 and/or “Removing the CPU and Power Supply Boards” on page 4-1 of Section 4.

Run Test

This test detects the operational condition of the DBV-30X unit. When the test starts, the bill inserted to stacked operations are continuously repeated. No LEDs lit means the DBV-30X unit is operating properly. If the Red or Yellow LED lights, refer to the Run Test Error Codes listed in Table A-5 to obtain a description of the error.

Table A-5 Run Test Errors

SW-1 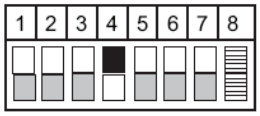

Condition LED Blink No.			Running Condition	Cause and Solution
R	Y	G		
	1		Stacker Full	Check all harnesses and connectors. A MAG/CPU board failure may have occurred. Change the MAG and/or CPU board if required. Refer to “MAG Circuit Board Removal” on page 4-7 and/or “Removing the CPU and Power Supply Boards” on page 4-1 of Section 4.
2			Stacker Jam/ Locked	Check all harnesses and connectors. A CPU and/or Small Feed Board failure may have occurred. Change the CPU/Small Feed Board if required. Refer to “Removing the CPU and Power Supply Boards” on page 4-1 and/or “Removing the Small Feed Sensor Boards” on page 4-6 of Section 4. The Stacker Motor may be defective. Change the motor if required. Refer to “Removing the Drive and Stacking Motors” on page 4-3 of Section 4.
	4		Acceptor Jam	Contact your JCM Technical Support Representative.

Table A-5 Run Test Errors (Continued)

SW-1 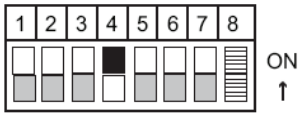

Condition LED Blink No.			Running Condition	Cause and Solution
R	Y	G		
5			Motor Speed	Power Supply Board failure may have occurred. Refer to “Removing the CPU and Power Supply Boards” on page 4-1 of Section 4.
6			Motor Lock-up	Motor Encoder Sensor does not detect motor rotation. Check all harnesses and connectors. A CPU board failure may have occurred. Change the CPU Board. Refer to “Removing the CPU and Power Supply Boards” on page 4-1 of Section 4.
	10		Cash Box Not Set	Reseat the Cash Box into proper position.Check all harnesses and connectors. A MAG and/or CPU board failure may have occurred. Change the MAG and/or CPU board if required. Refer to “MAG Circuit Board Removal” on page 4-7 and/or “Removing the CPU and Power Supply Boards” on page 4-1 of Section 4.
	11		Cash Box Sensor Error	Check whether a foreign object is lodged between the transport path and the Cash Box. Check all harnesses and connectors. A MAG and/or CPU board failure may have occurred. Change the MAG and/or CPU board if required. Refer to “MAG Circuit Board Removal” on page 4-7 and/or “Removing the CPU and Power Supply Boards” on page 4-1 of Section 4.
	13		Lower Guide not locked in position	Reset the Lower Guide into proper position. Check all harnesses and connectors. A MAG and/or CPU board failure may have occurred. Change the MAG and/or CPU board if required. Refer to “MAG Circuit Board Removal” on page 4-7 and/or “Removing the CPU and Power Supply Boards” on page 4-1 of Section 4.

Continuous Insertion Protect Lever Test

This test detects the DBV-30X unit’s Continuous Insertion Protect Lever operating condition. When the test starts, the lever will be working constantly. When the Condition Red, Yellow and Green LEDs blink, refer to the following the Continuous Insertion Protect Lever Error Codes listed in Table A-6 to obtain a description of the error.

Table A-6 Continuous Insertion Protect Lever Test Errors

SW-1 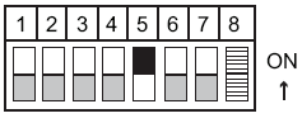

Condition LED Blink No.			Continuous Insertion Protect Lever Condition	Cause and Solution
R	Y	G		
			Normal	None
6	6	6	Motor Lock-up	Motor Encoder Sensor does not detect motor rotation. Check all harnesses and connectors. A CPU board failure may have occurred. Change the CPU Board. Refer to “Removing the CPU and Power Supply Boards” on page 4-1 of Section 4.
9	9	9	Sensor Abnormal	Check the lever and harness. Check that the spring is properly installed.

Acceptor Sensor Test

This test detects the Acceptor Sensor's operating condition. In order to check the Acceptor Sensors operating condition, set the related DIP Switch to ON depending on the Sensor Test selected fromTable A-7. For details concerning a particular Sensor's location, refer to Sensor Board and Motor Location information on page A-14 of this Appendix.

NOTE: Multiple Sensors can be tested at the same time.

Table A-7 Acceptor Sensor Tests

SW-1 

DIP Switch Settings								Sensor Being Tested
1	2	3	4	5	6	7	8	
X							On/Off	LEV (Serial Insertion Prevention Lever)
	X						On/Off	PSF (Entrance Sensor)
		X					On/Off	PSML (Left Red Sensor)
			X				On/Off	PSMR (Right Red Sensor)
				X			On/Off	PSL (Left IR Sensors)
					X		On/Off	PSLR (Right IR Sensors)
						X	On/Off	PSE (Exit Sensor)

Stacker Sensor Test

This test detects the Stacker Sensor's operating condition. In order to check the Stacker Sensor's condition, set the related DIP Switch to ON depending on the Sensor Test selected from Table A-8. For details concerning a particular Sensor's location, refer to Sensor Board and Motor Location information on page A-15 of this Appendix.

NOTE: The Stacker Sensor test can only test one specific Sensor at a time.

Table A-8 Stacker Sensor Tests

SW-1 

DIP Switch Settings								Sensor Being Tested
1	2	3	4	5	6	7	8	
X							On/Off	Left Transport Sensor
	X						On/Off	Reserved
		X					On/Off	Right Transport Sensor
			X				On/Off	Stacker Home Position Sensor
				X			On/Off	Cash Box Sensor
					X		On/Off	Stacker Motor Encoder Sensor
						X	On/Off	Feed Motor Encoder Sensor

Bill Acceptance Test

This test checks the Bill Validator for proper Bill Acceptance. To run the Test proceed as follows:

1. Set Switches 1, 2, 3, and 4 on DIP Switch SW-1 to ON (as depicted in Table A-9); then
2. Set DIP Switch SW1-8 OFF causing the Validator to initialize itself.
3. Insert Bills of different Demominations. As each Bill is accepted and stacked, the Front Bezel LEDs will flash a Code count (See Table A-9) to indicate the Denomination of the Bill just accepted.
4. When a Bill or Bills are not accepted, refer to Table A-2 “Reject Codes” on page A-6” to resolve the problem.

Table A-9 Bill Acceptance Test Flash Codes

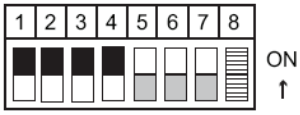

Bezel LED Flashes	Denomination Accepted
1	$1
2	$5
3	$10
4	$20

NOTE: After running the Bill Acceptance Test it is necessary to recycle power to the DBV-30X Unit, and then re-enter the Test Mode (by turning DIP Switch 8 ON) prior to running any other Tests.

Stacker Motor Forward/Reverse Rotation Test

This test detects the forward/reverse stacker motor speed rotation. Confirm that the stacker motor operates smoothly without abnormal noise. Set DIP Switches SW1-1 through SW1-7 according to those indicated in Table A-3.

Table A-10 Stacker Motor Rotation Test Errors

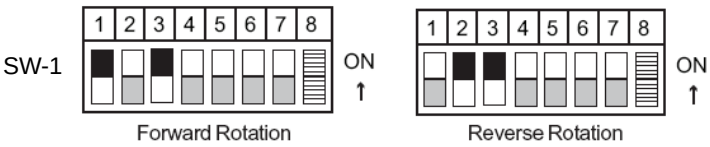

Condition LED Blink No.			Motor Condition	Cause and Solution
R	Y	G		
1	1	1	Normal	None
2	2	2	Fast	Contact your JCM Technical Support Representative.
3	3	3	Slow	A Power Supply Board failure may have occurred. Refer to “Removing the CPU and Power Supply Boards” on page 4-1 of Section 4.
6	6	6	Abnormal	The Stacker Motor Encoder Sensor does not detect motor rotation. Check all harnesses and connectors. A CPU board failure may have occurred. Change the CPU Board. Refer to “Removing the CPU and Power Supply Boards” on page 4-1 of Section 4.

DIP Switch Test

This test detects the DIP Switch Blocks operational condition. Perform the test given in the following steps:

1. Set all switches of DIP Switch 1 to ON and supply power to the DBV-30X (See Figure A-6). Check that the Faceplate Indication LEDs are blinking and the Red, Yellow and Green Condition LED's light.
2. Start the test by switching SW1-8 to OFF. The blinking LEDs will extinguish (turn OFF).
3. Set DIP Switches SW1-1 through SW1-7 to ON. Confirm that the Red, Yellow and Green LEDs blink one blink at a time.

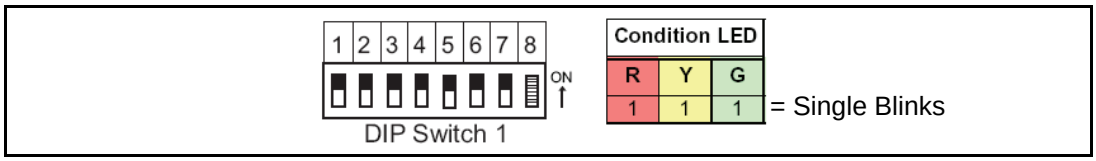

Figure A-6 DIP Switch Test 1

4. Set DIP Switch SW1-1 through SW1-7 and SW2-1 through SW2-8 to ON (See Figure A-7). Confirm that the Red, Yellow and Green LEDs are blinking two blinks at a time (twice).

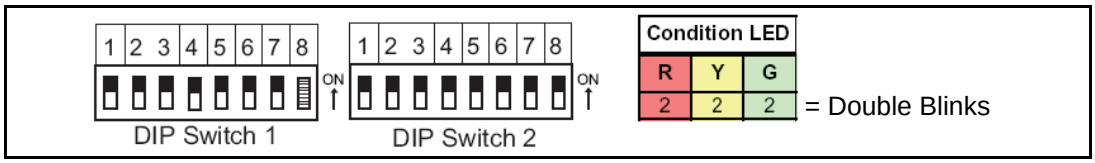

Figure A-7 DIP Switch Test 2

5. Set the even numbered switches (i.e., SW1-2, SW1-4, SW1-6, SW2-2, SW2-4, SW2-6 and SW2-8) to OFF (See Figure A-8). Confirm that the Red, Yellow and Green LEDs are blinking three blinks at a time.

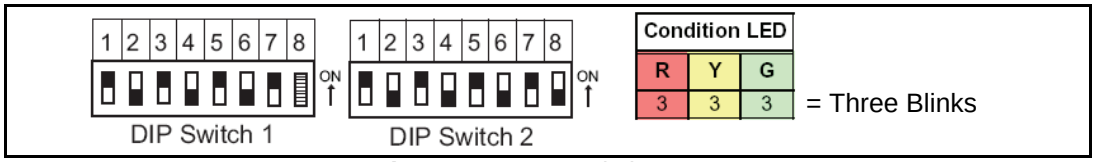

Figure A-8 DIP Switch Test 3

6. Set the odd numbered switches (i.e., SW1-1, SW1-3, SW1-5, SW1-7, SW2-1, SW2-3, SW2-5 and SW2-7) to OFF (See Figure A-9). Confirm that the Red, Yellow and Green LEDs are all extinguished (OFF).

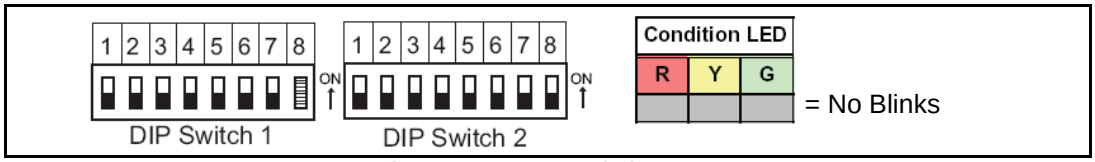

Figure A-9 DIP Switch Test 4

This is the end of the DIP Switch Test. To end the test, set DIP Switch SW1-8 OFF, and turn the DBV-30X unit's power supply OFF.

NOTE: If any LED status is different from those mentioned above, a DIP Switch or CPU board failure may have occurred. A CPU board failure may have occurred. Change the CPU Board. Refer to "Removing the CPU and Power Supply boards" on page 4-1 of Section 4. If the error is still exists once the CPU has been replaced, contact the JCM Technical Service Department.

Sensors, Circuit Boards and Motor Location Diagram

Figure A-10 illustrates the various Sensors, Circuit Boards and Motors within the DBV-30X unit.

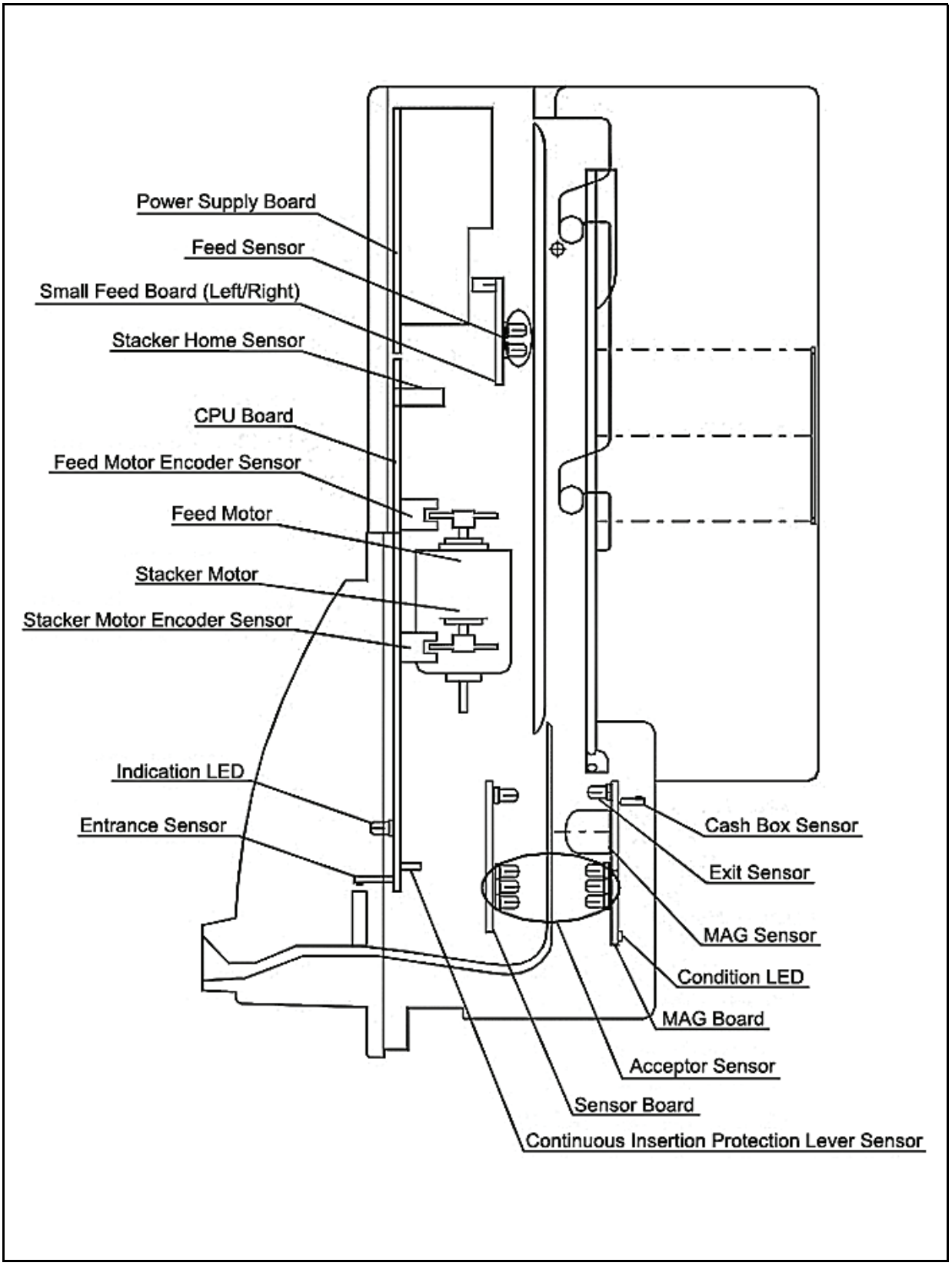

Figure A-10 Sensor, Circuit Board and Motor Location Diagram

Optipay® BV
DBV-30X Bill Validator
Appendix B

B GLOSSARY

A

1 **Acceptor Head –** the unit containing the sensors capable of reading the Note (Banknote) features… See Page 2-17

C

2 **Cash Box –** a container designed to collect and stack all accepted Banknotes… See Page 2-17

3 **C-clip Ring –** a semicircular retainer clip in the form of the letter "C" designed to fit into a shaft groove to retain a component in place, and having hole rings at its ends for insertion of special expansion/removal/replacement tool tips… See Page 4-3

4 **CPU** – acronym for Central Processor Unit - a Circuit Board usually containing many computer processing integrated circuit chips… See Page 4-1

D

5 **DBV** – acronym for Dollar Bill Validator … See Page 1-1

6 **DIP Switch –** Dual Inline Package Switch - a printed circuit board mountable two-position slide switch package containing up to 16 individual switches … See Page 2-14

7 **DIP Switch Block –** a single Dual Inline Package two-position circuit board switch set … See Page 2-14

E

8 **E-clip Rings –** a semicircular retainer clip with a center tab forming the letter "E" designed to fit into a shaft groove to retain a component in place, and having hole rings at its ends for insertion of special expansion/removal/replacement tool tips… See Page 4-4

9 **Encoder –** a gear having multiple protrusions (flags) used to interrupt an optical sensor to determine shaft rotational speed… See Page 4-5

F

10 **Flowchart –** a branched set of trouble shooting steps to test a specific DBV component(s) function… See Page A-1

H

11 **Home Position –** the fully retracted position of the Stacker Plate… See Page 4-5

L

12 **LED** – acronym for Light Emitting Diode… See Page 1-8

M

13 **MAG** – abbreviation for MAGnetic… See Page 4-7

14 **MDB** – acronym for Multi Drop Bus - a communications protocol standard used by the Vending Machine Industry… See Page 3-1

P

15 **Photo Coupler** – an electronic isolation device that uses an LED and photo-diode combination to translate/transfer a signal condition between large electrical potential differences… See Page 2-6

16 **Pusher Mechanism** – a mechanical device to move a Note (Banknote) from the Transport into the Cash Box… See Page 4-3

S

17 **Sensor** – a photo sensitive device positioned to detect specific optical signal levels from an inserted bill or bar coded ticket… See Page 2-18.

Issue #4019-SME-01-04